42EM ATMOSPHERA™

Ducted Fan Coil Unit

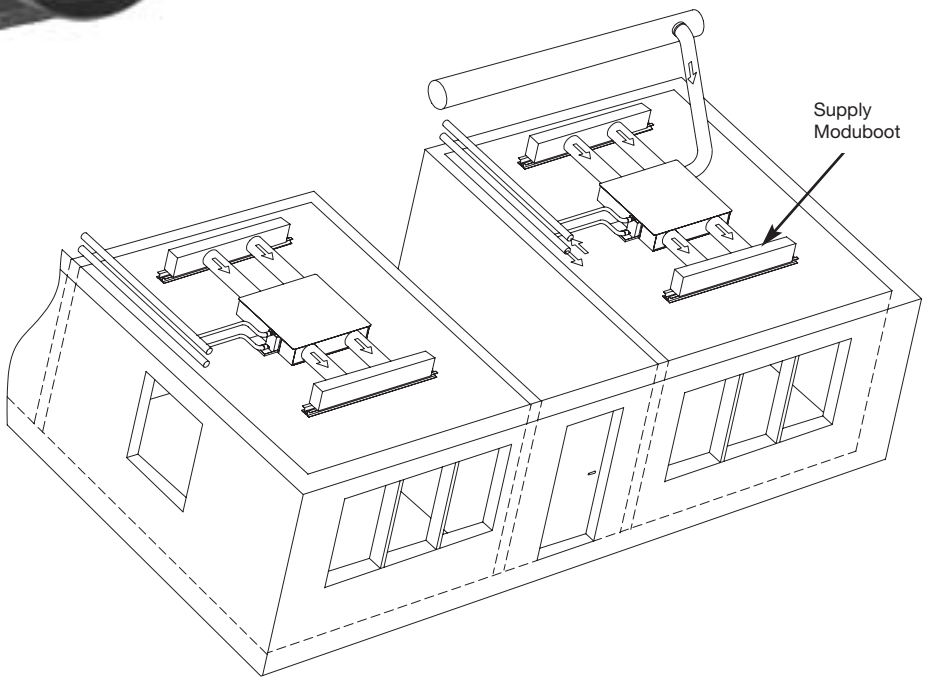

Carrier is participating in the Eurovent Certification Programme. Products are as listed in the Eurovent Directory of Certified Products.

Selection manual

Quality Management System Approval

TABLE OF CONTENTS

1 - INTRODUCTION

The 42EM Atmosphera from Carrier is a compact air conditioning system, available in three sizes - 1, 2 and 3. Sizes 2 and 3 are both available in four models and four motor drive selections, suitable for air conditioning of rooms from 25 to 75 m^2 in size.

The main components of each unit comprise a centrifugal fan, a fresh air inlet with an air flow regulator (option), a chilled water cooling coil and either a hot water heating coil or an electric heater.

Connections between the unit and one or more linear boot diffusers (35BD Moduboot range), installed in the false ceiling above the area to be air conditioned are made on site using thermally and acoustically insulated flexible ducting.

The complete system comprises one or more Carrier air or water-cooled chillers and one or more air handling units to supply fresh air to the 42EM Atmosphera units. These may be installed in a false ceiling where they can be connected to the fresh air supply and the hot and chilled-water circuits.

With their low height, the 42EM Atmosphera can be installed in most areas. Its design allows for easy maintenance.

The 42EM Atmosphera consists of a casing without sharp edges (where possible) to make product installation and maintenance safer.

The 42EM Atmosphera was designed to meet customer requirements and is available in many configurations and models.

Noise or more precisely the absence of noise is a deciding factor for the comfort of the occupants. The 42EM Atmosphera has been designed to be particularly quiet. Low noise levels and easy maintenance are key factors influencing the selection of an air conditioning system.

1.1 - Comfort

The top of the range Atmosphera can have a Carrier numeric controller to provide optimised comfort for the building occupants.

1.2 - Air quality

1.2.1 - Fresh air

The selection of the air flow controller is essential, based on the room occupancy, and will make an important contribution to the indoor air quality.

1.2.2 - Filtration

The cleanliness of the supply air is one of the primary functions of air treatment giving the most basic and important measure of “air quality” essential to our health. The air, which we breathe, contains a wide diversity of particles, pollens and dust, all possible allergens which can have varying effects upon the health of individuals.

These come from many sources both within and outside the building. Air filtration protects building occupants against these particles and also the building (furnishings, equipment, etc.) against contamination and damage.

The Atmosphera is equipped with a G3 (85% gravimetric efficiency) filter.

1.3 - Carrier QUALITY

The Carrier QUALITY philosophy embraces the product itself, its conception, its design and the integrity of its declared performance (proven in rigourous laboratory tests) as well as the manufacturing process, materials and components used to create the product.

Carrier has been accredited with LRQA certification in accordance with ISO standard 9001 since 1989.

2 - FEATURES

2.1 - General

The Carrier 42EM Atmosphera is a range of fan coil units designed for installation above false ceilings.

Three major aspects influenced the design of this product range:
- Configuration flexibility
- Low noise levels
- Compact design

2.1.1 - Configuration flexibility

To best meet customer requirements, many models and configurations are available.

The Carrier 42EM Atmosphera comes in three sizes - 1, 2 and 3. Sizes 2 and 3 are both available in four models and four motor drive selections, suitable for air conditioning of rooms from 25 to 75 m² in size.

To ensure dimensional and location flexibility for the suction and discharge spigots, two distinct separate product ranges are available:
- modular models
- compact in-line models

Modular models

These models offer more duct connection flexibility, as they not only allow connection spigots with a diameter of 200 mm on the sides, but also easy reconfiguration on site.

The modular model consists of a non-ducted base unit, on which a return air plenum (factory-assembled) can be installed.

Size 1

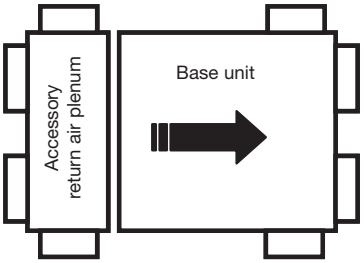

Sizes 2 and 3

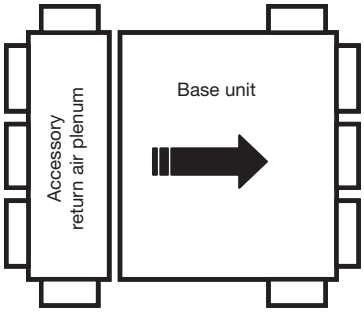

NOTE : Carrier recommends not to exceed an air velocity of 4 m/s (125 l/s) per spigot.

Compact in-line models

These one-piece units are ducted in-line supply and return air models (only 125 mm diameter fresh air ducts can be connected on the sides).

Size 1

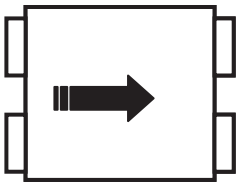

Sizes 2 and 3

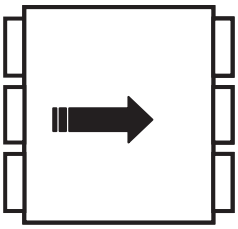

2.1.2 - Low noise levels

In order to further enhance occupant comfort this product range offers especially low noise levels.

The casing of the Carrier 42EM Atmosphera is made of galvanised sheet steel with full high-efficiency internal lining for optimised thermal and sound insulation of the unit.

In order to comply with the various local regulations (fire class) the Carrier 42EM Atmosphera is available in two insulation versions:
- class M1 type insulation
- class 0 insulation in accordance with BS 476, part 6 and 7.

The 42EM Atmosphera is also equipped with anti-vibration mounts with a strong vibration absorption levels.

2.1.3 - Compact design

To allow installation in most false ceiling designs, the condensate removal pan height in the 42EM Atmosphera is the same for all sizes (1, 2 or 3) - 215 mm from the top of the unit.

In order to reduce the dimensions of the 42EM to the minimum, the units are equipped with high-efficiency heat exchangers with very high cooling capacity/treated air flow ratios.

2.1.4 - Codification

42EM 1 0 A XXX...

Unit size (chassis)
(1, 2 or 3)

Fan motor assembly size
(0, 1, 2 or 3)

Chassis and insulation type
(A, B, C or D)

A = modular model with standard insulation
B = modular model with insulation class 0 in accordance with BS 476, part 6 and 7 and metal spigots
C = compact model with standard insulation
D = compact model with insulation class 0 in accordance with BS 476, part 6 and 7 and metal spigots

Modular chassis types A and B

Compact in-line-chassis types C and D

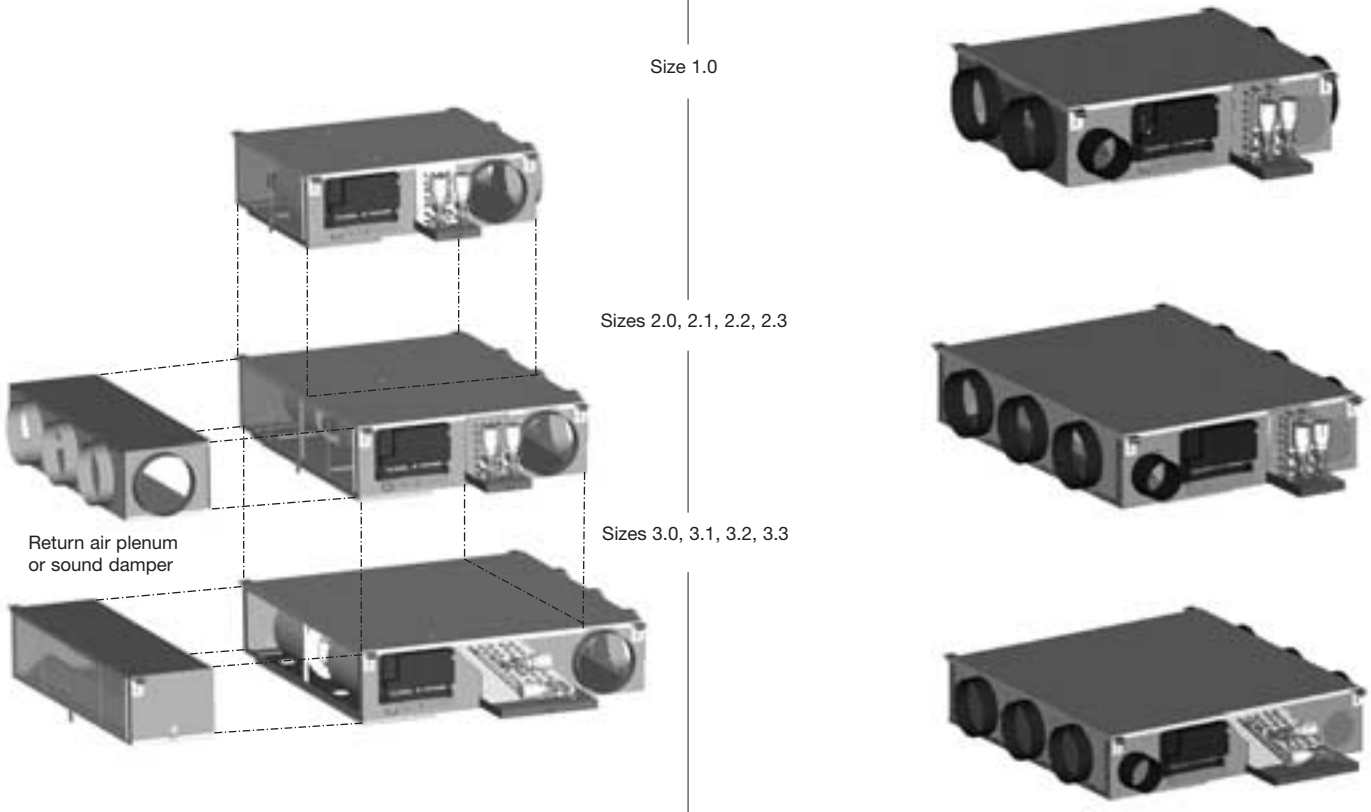

2.2 - Several possible configurations

Depending on the installation site requirements, several versions of the Atmosphera can be used:

- The base unit is designed for non-ducted return air. In this configuration filter removal is from the rear of the unit.

42EMxxA...

42EMxxB...

- There are two types of ducted units available:
  - the modular version - base unit plus return air plenum sub-assembly.

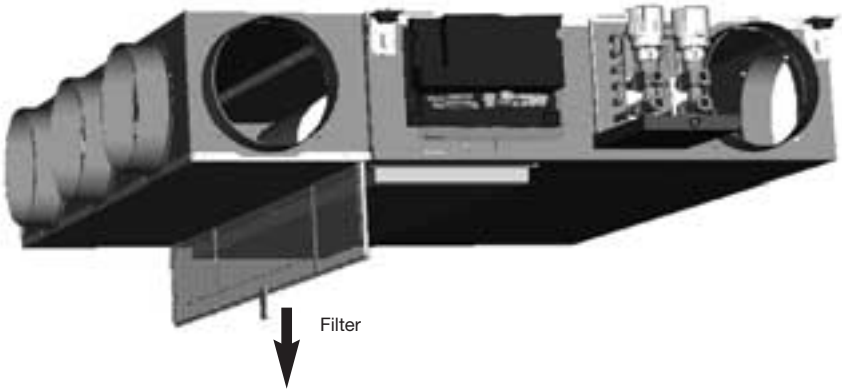

42EMxxA...

42EMxxB...

  - compact in-line version - one-piece design without the possibility to use 200 mm diameter spigots on the sides.

42EMxxC...

42EMxxD...

  - For both ducted models the filter removal is from below the unit.

2.3 - Operating limits

- **Cooling mode:**
  Supply air temperature 12°C, when the unit is installed in an ambient temperature of 27°C dry bulb and 65% relative humidity.

- **Heating mode:**
  The air discharge temperature must not exceed 60°C to avoid damage of the discharge spigots.

  To avoid the risk of stratification and the resulting discomfort, Carrier advises to keep the discharge temperature below 35°C.

- **Operating environment**
  The 42EM Atmosphera has been designed for internal application in "urban" conditions having a non-corrosive, dust free and non-marine environment.

- The concentrations of the following chemicals must not be exceeded in any event:
  - SO_2 < 0,02 ppm
  - H_2S < 0.02 ppm
  - NO, NO_2 < 1 ppm
  - NH_3 < 6 ppm
  - N_2O < 0.25 ppm

Recommended coil water quality
At installation handover, and then periodically every year, it is advised to analyse the water for bacteria (detection of ferro-bacterias, H_2S producing and sulphate reducing bacteria) and chemicals (in order to avoid problems due to corrosion and scaling).

The water circuit must include all the necessary elements for the treatment of the water: filters, additives, intermediate exchangers, purges, drains, isolating valves, etc., according to the analysis results.

The results must be in accordance with the values shown below:

- Total hardness in French degrees: 10 < TH < 15
- Chloride [CL^-] < 10 mg/l
- Sulphate [SO_4^{2-}] < 30 mg/l
- Nitrate [NO_3^-] = 0 mg/l
- Dissolved iron < 0.5 mg/l
- Dissolved oxygen 4 < [O_2] < 9 mg/l
- Carbon dioxide [CO_2] < 30 mg/l
- Resistivity 2000<Resistivity <5000 Ωcm
- pH 6.9 < pH < 8

2.4 - Physical and electrical data

42EM Atmosphera		Size 1.0	Size 2.0	Size 2.1	Size 2.2	Size 2.3
Nominal air flow at high speed	l/s (m^3/h)	155 (558)	192 (690)	182 (655)	272 (980)	325 (1170)
Static pressure available at nominal air flow (unit without supply and return air plenum)	Pa	50	50	50	50	50
Total cooling capacity - chilled water coil*	kW	3.49	4.62	4.41	6.11	7.02
Sensible capacity - chilled water coil*	kW	2.73	3.52	3.34	4.77	5.56
Heating capacity - hot water coil**	kW	1.61	1.93	1.85	2.44	2.74
Power supply 230 V - 1 ph - 50 Hz	U %	± 15	± 15	± 15	± 15	± 15
Operating weight (base unit and return air plenum)	kg	29+7	44+10	46+10	46+10	46+10
Water coil						
Copper tubes Ø 3/8”						
Aluminium fins, purge valve, female connection						
• Test pressure	kPa	2400	2400	2400	2400	2400
• Operating pressure	kPa	1600	1600	1600	1600	1600
2-row coil						
• Connection		1/2” nut (gas)				
• Water content	l	1	1.7	1.7	1.7	1.7
Monobloc 4-row coil						
• Cooling connection		1/2” nut (gas)				
• Heating connection		1/2” nut (gas)				
• Water content						
- cooling	l	1	1.7	1.7	1.7	1.7
- heating	l	0.2	0.3	0.3	0.3	0.3
Electric heater - resistance wire type						
• Power supply: 230 V - 1 ph - 50 Hz	U %	± 15	± 15	± 15	± 15	± 15
• Heating capacity - excluding fan heat (+5/-10 %)	W	500	1000	1000	2000	2000
• Self-resetting safety thermostat cut-out temperature	°C	75	75	75	75	75
• Over-temperature thermofuse link, fusing temperature	°C	170	170	170	170	170
• Current absorbed	A	2.17	4.35	4.35	8.7	8.7
• Minimum heater air flow required	l/s (m^3/h)	28 (100)	42 (150)	42 (150)	55 (200)	55 (200)
Fan		Forward-curved centrifugal fan				
• Number of centrifugal wheels		1	2	2	2	2
Motor		Supply voltage 230 V - 1 ph - 50 Hz, 4 pole asynchronous, internal overload protection, permanent capacitor, class B winding insulation, varnish class F				
• Maximum absorbed power at 230 V***	W	119	110	128	182	229
• Nominal current***	A	0.52	0.52	0.60	0.82	1.02
• Starting current	A	1.8	1.4	3.0	3.0	3.0
Air filter		Throwaway, fire rating medium: M1				
• Dimensions	mm	208 x 578	208 x 978	208 x 978	208 x 978	208 x 978
• Filter efficiency: 85% (gravimetric) - G3						
Fresh air connection						
Outside diameter	mm	125	125	125	125	125
Constant minimum air flow (-10% - +20%)	l/s (m^3/h)	8.3 (30)	8.3 (30)	8.3 (30)	8.3 (30)	8.3 (30)
Constant maximum air flow (-10% - +20%)	l/s (m^3/h)	44.4 (160)	44.4 (160)	44.4 (160)	44.4 (160)	44.4 (160)
ΔP (upstream/downstream):						
- Controller 8.3 l/s (30 m^3/h)	Pa	50-200	50-200	50-200	50-200	50-200
- Controller 16.7 to 44.4 l/s (60 to 160 m^3/h adjustable)	Pa	70-200	70-200	70-200	70-200	70-200
Variable air flow (optional motorised valve) - min./max.	l/s (m^3/h)	0/55 (0/200)	0/55 (0/200)	0/55 (0/200)	0/55 (0/200)	0/55 (0/200)
Min. available pressure in upstream fresh air duct (motorised valve)	Pa	180	180	180	180	180

Atmosphera water connections

The water circuit in the Atmosphera units is guaranteed for an operating pressure of 1000 kPa, although the Atmosphera units components are individually designed and tested for a pressure of 1600 kPa.

For applications requiring an operating pressure of more than 1000 kPa, please contact your local Carrier representative.

Legend:

* Based on an entering water temperature of 7°C, entering air at 27°C dry bulb and 47% relative humidity, and a water temperature difference of 5 K at maximum air flow (Eurovent conditions).

** Based on an entering water temperature of 50°C, entering air at 20°C and a water temperature difference of 10 K at maximum air flow (Eurovent conditions).

*** Refer to electrical data tables.

42EM Atmosphera		Size 3.0	Size 3.1	Size 3.2	Size 3.3
Nominal air flow at high speed	l/s (m^3/h)	192 (690)	182 (655)	272 (980)	325 (1170)
Static pressure available at nominal air flow (unit without supply and return air plenum)	Pa	50	50	50	50
Total cooling capacity - chilled water coil*	kW	5.62	5.31	7.54	8.64
Sensible capacity - chilled water coil*	kW	3.94	3.75	5.38	6.29
Heating capacity - hot water coil**	kW	2.05	1.97	2.69	3.07
Power supply 230 V - 1 ph - 50 Hz	U %	± 15	± 15	± 15	± 15
Operating weight (base unit and return air plenum)	kg	64+10	66+10	66+10	66+10
Water coil					
Copper tubes Ø 3/8”					
Aluminium fins, purge valve, female connection					
• Test pressure	kPa	2400	2400	2400	2400
• Operating pressure	kPa	1600	1600	1600	1600
2-row coil					
• Connection		1/2” nut (gas)			
• Water content	l	3.4	3.4	3.4	3.4
Monobloc 4-row coil					
• Cooling connection		1/2” nut (gas)			
• Heating connection		1/2” nut (gas)			
• Water content					
- cooling	l	3.4	3.4	3.4	3.4
- heating	l	0.45	0.45	0.45	0.45
Electric heater - resistance wire type					
• Power supply: 230 V - 1 ph - 50 Hz	U %	± 15	± 15	± 15	± 15
• Heating capacity - excluding fan heat (+5/-10 %)	W	1000	1000	2000	2000
• Self-resetting safety thermostat cut-out temperature	°C	75	75	75	75
• Over-temperature thermofuse link, fusing temperature	°C	170	170	170	170
• Current absorbed	A	4.35	4.35	8.7	8.7
• Minimum heater air flow required	l/s (m^3/h)	42 (150)	42 (150)	55 (200)	55 (200)
Fan		Forward-curved centrifugal fan			
• Number of centrifugal wheels		2	2	2	2
Motor		Supply voltage 230 V - 1 ph - 50 Hz, 4 pole asynchronous, internal overload protection, permanent capacitor, class B winding insulation, varnish class F			
• Maximum absorbed power at 230 V***	W	110	128	182	229
• Nominal current***	A	0.52	0.60	0.82	1.02
• Starting current	A	1.4	3.0	3.0	3.0
Air filter		Throwaway, fire rating medium: M1			
• Dimensions	mm	208 x 978	208 x 978	208 x 978	208 x 978
• Filter efficiency: 85% (gravimetric) - G3					
Fresh air connection					
Outside diameter	mm	125	125	125	125
Constant minimum air flow (-10% - +20%)	l/s (m^3/h)	8.3 (30)	8.3 (30)	8.3 (30)	8.3 (30)
Constant maximum air flow (-10% - +20%)	l/s (m^3/h)	44.4 (160)	44.4 (160)	44.4 (160)	44.4 (160)
ΔP (upstream/downstream):					
- Controller 8.3 l/s (30 m^3/h)	Pa	50-200	50-200	50-200	50-200
- Controller 16.7 to 44.4 l/s (60 to 160 m^3/h adjustable)	Pa	70-200	70-200	70-200	70-200
Variable air flow (optional motorised valve) - min./max.	l/s (m^3/h)	0/55 (0/200)	0/55 (0/200)	0/55 (0/200)	0/55 (0/200)
Min. available pressure in upstream fresh air duct (motorised valve)	Pa	180	180	180	180

Atmosphera water connections

The water circuit in the Atmosphera units is guaranteed for an operating pressure of 1000 kPa, although the Atmosphera units components are individually designed and tested for a pressure of 1600 kPa.

For applications requiring an operating pressure of more than 1000 kPa, please contact your local Carrier representative.

Legend:

* Based on an entering water temperature of 7°C, entering air at 27°C dry bulb and 47% relative humidity, and a water temperature difference of 5 K at maximum air flow (Eurovent conditions).

** Based on an entering water temperature of 50°C, entering air at 20°C and a water temperature difference of 10 K at maximum air flow (Eurovent conditions).

*** Refer to electrical data tables.

2.5 - Dimensional drawings

2.5.1 - Maintenance access space required, mm

Sizes 1, 2 and 3

- Non-ducted return air

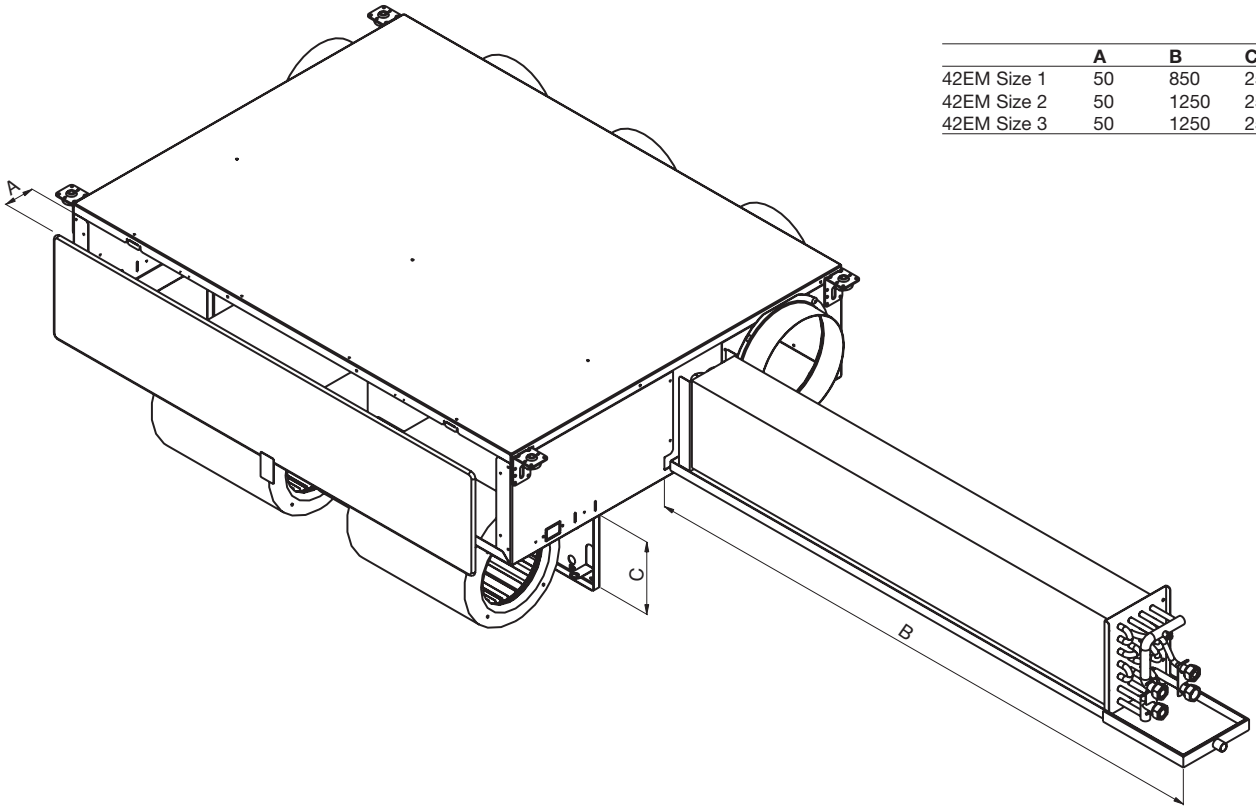

	A	B	C
42EM Size 1	50	850	250
42EM Size 2	50	1250	250
42EM Size 3	50	1250	250

Sizes 1, 2 and 3

- Ducted return air

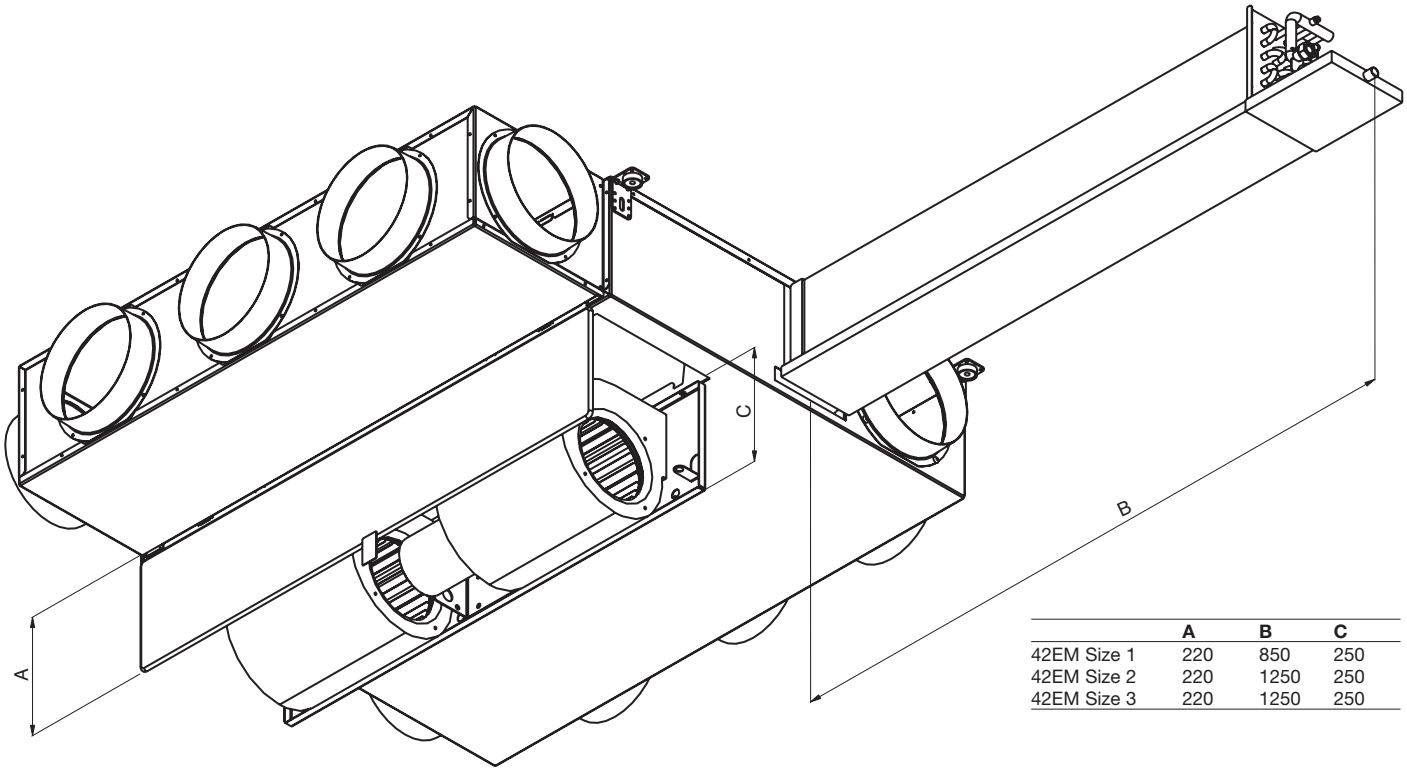

	A	B	C
42EM Size 1	220	850	250
42EM Size 2	220	1250	250
42EM Size 3	220	1250	250

2.5.2 - Overall dimensions, mm

Size 1

- Non-ducted return air

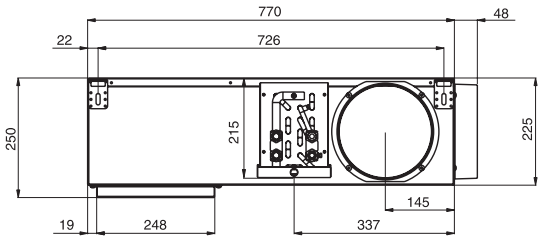

42EM10A...
42EM10B...

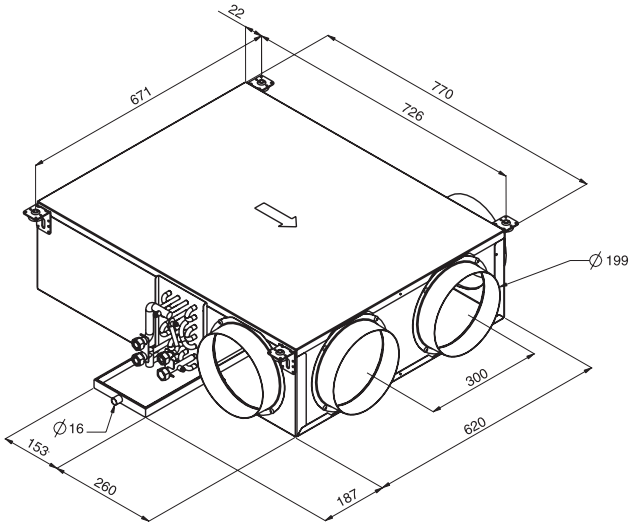

Size 1

- Ducted return air, modular model

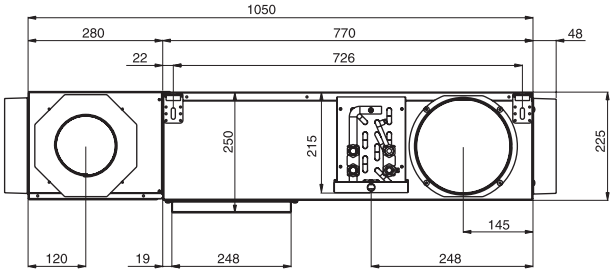

42EM10A...
42EM10B...

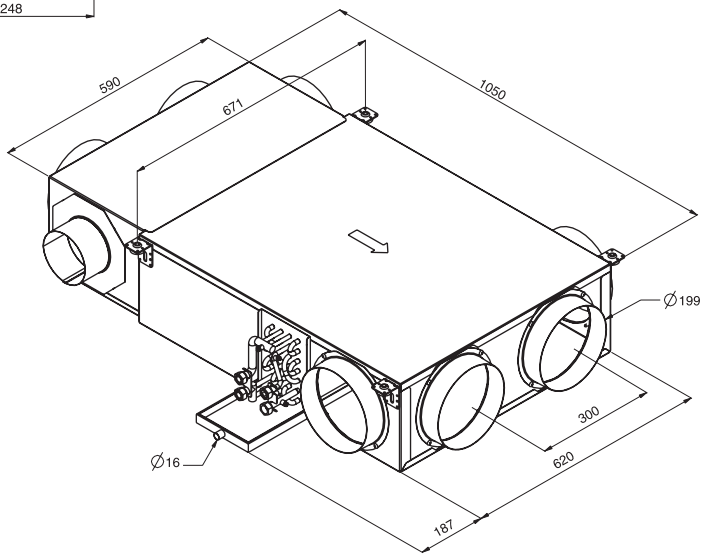

2.5 - Dimensional drawings, cont.

Size 1

- Ducted return air, compact, in-line model

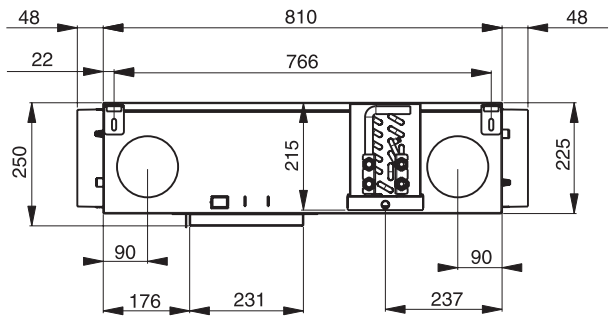

42EM10C...
42EM10D...

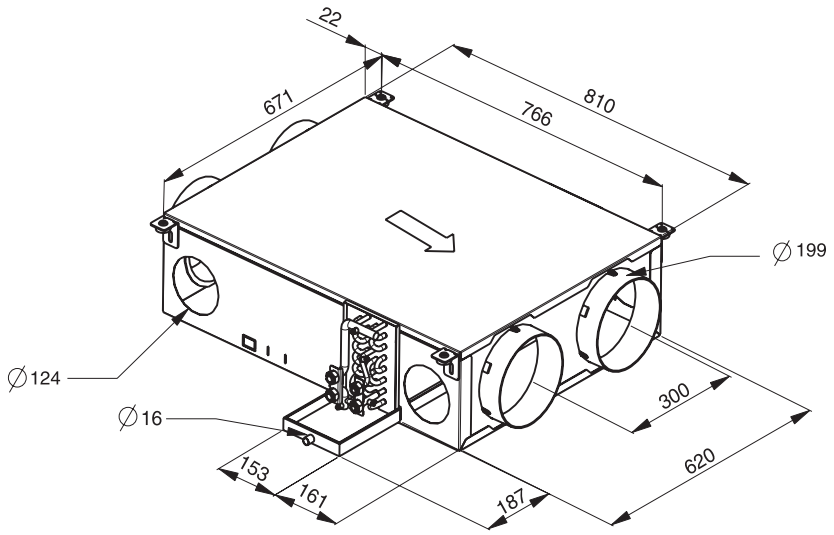

2.5.2 - Overall dimensions, mm

Size 2

- Non-ducted return air

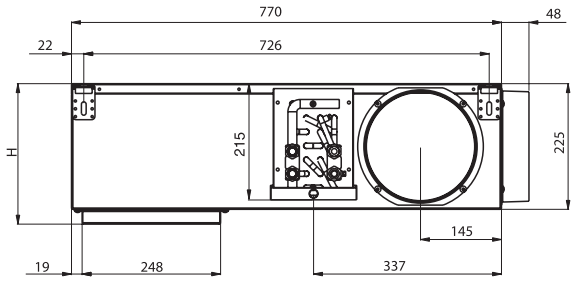

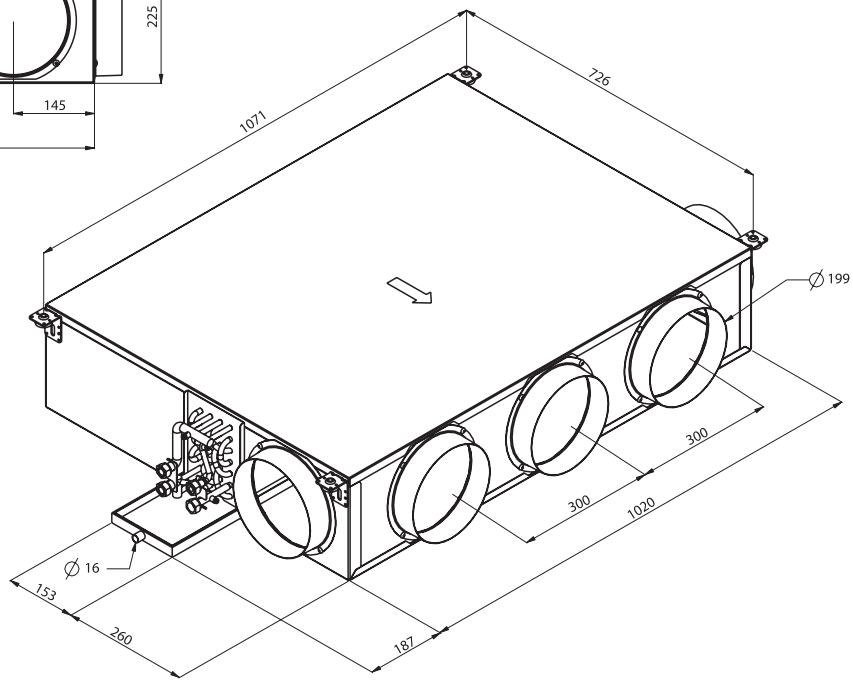

42EM2xA...
42EM2xB...

	H
42EM Size 2.0	225
42EM Sizes 2.1, 2.2, 2.3	250

Size 2

- Ducted return air, modular model

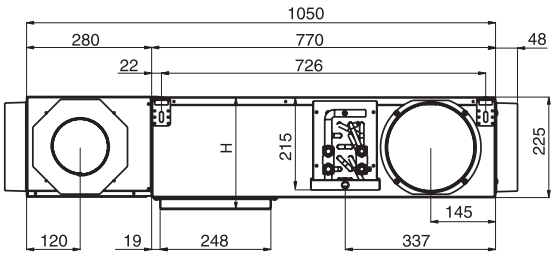

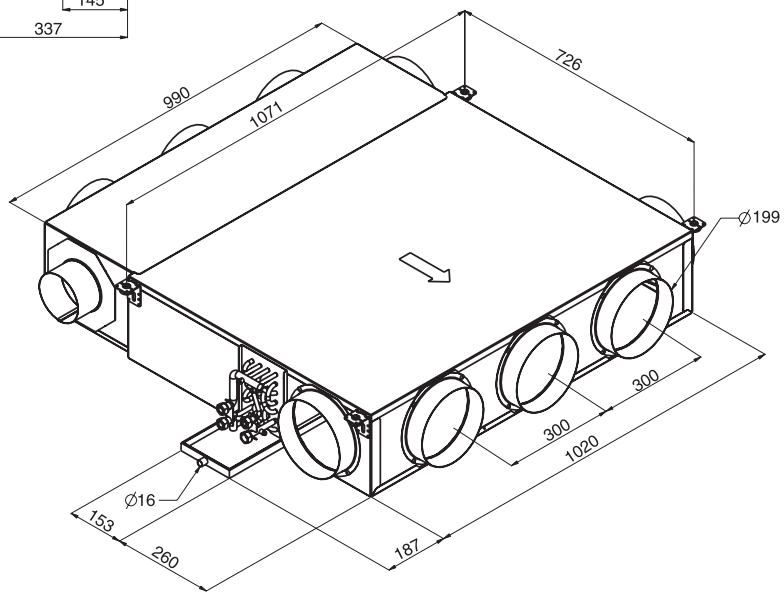

42EM2xA...
42EM2xB...

	H
42EM Size 2.0	225
42EM Sizes 2.1, 2.2, 2.3	250

2.5 - Dimensional drawings, cont.

Size 2

- Ducted return air, compact, in-line model

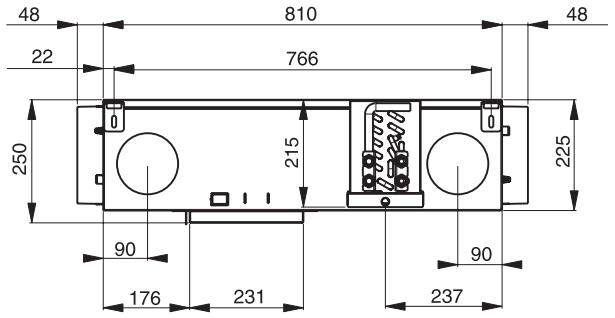

42EM2xC...
42EM2xD...

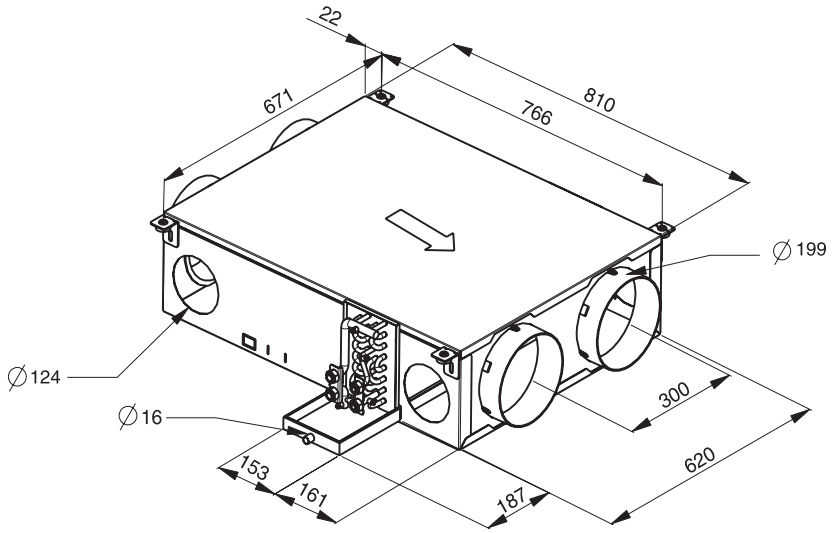

	H
42EM Size 2.0	225
42EM Sizes 2.1, 2.2, 2.3	250

2.5.2 - Overall dimensions, mm

Size 3

- Non-ducted return air

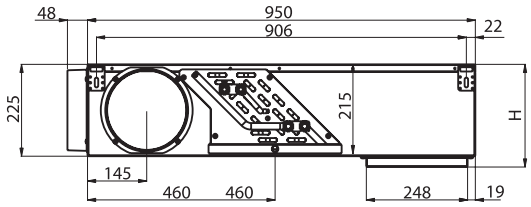

Left-hand connections

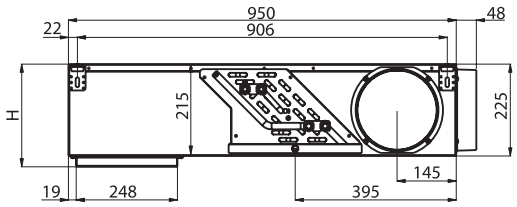

Right-hand connections

42EM3xA...
42EM3xB...

	H
42EM Size 3.0	225
42EM Sizes 3.1, 3.2, 3.3	250

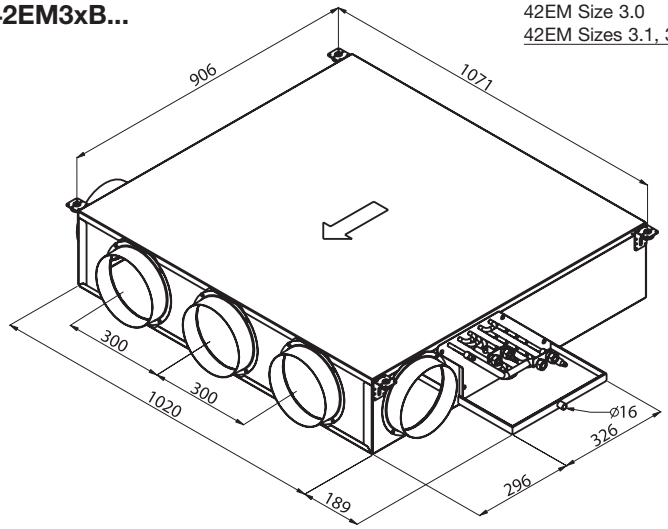

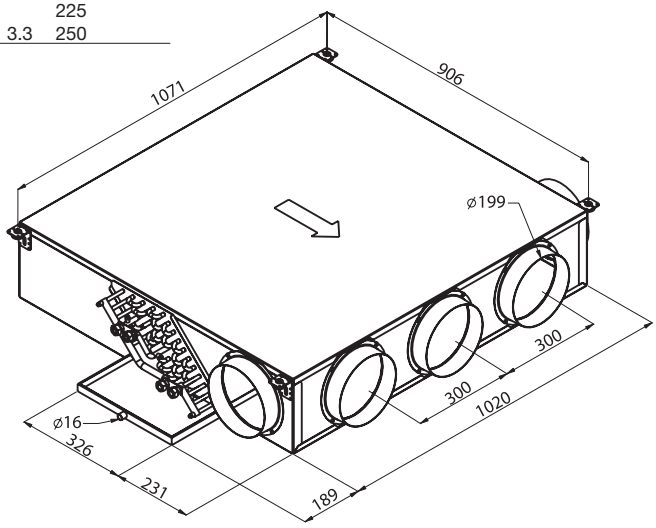

Size 3

- Ducted return air, modular model

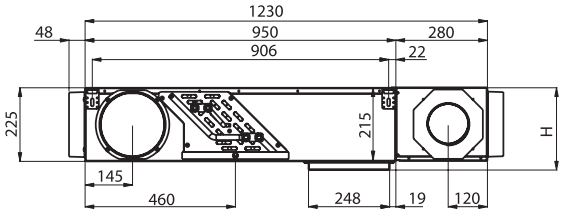

Left-hand connections

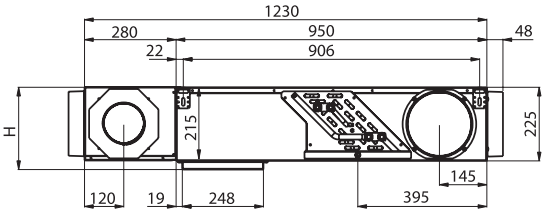

Right-hand connections

	H
42EM Size 3.0	225
42EM Sizes 3.1, 3.2, 3.3	250

42EM3xA...
42EM3xB...

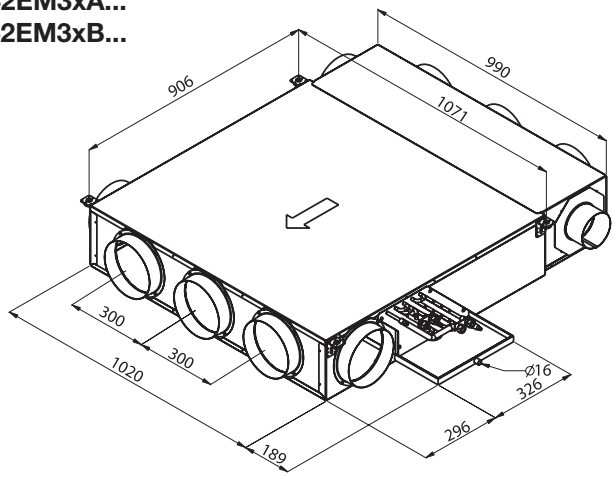

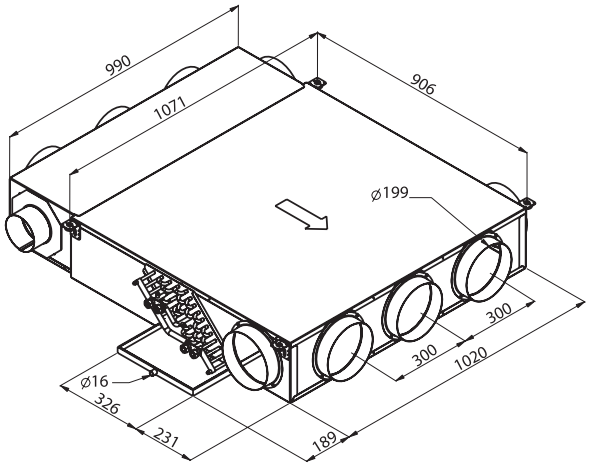

2.5 - Dimensional drawings, cont.

Size 3

- Ducted return air, compact, in-line model

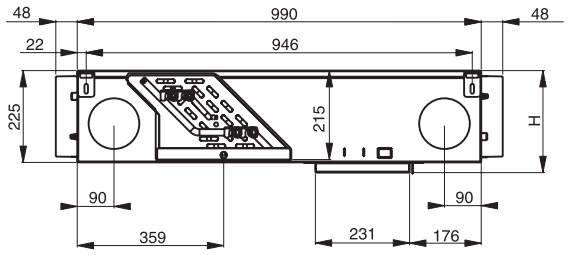

Left-hand connections

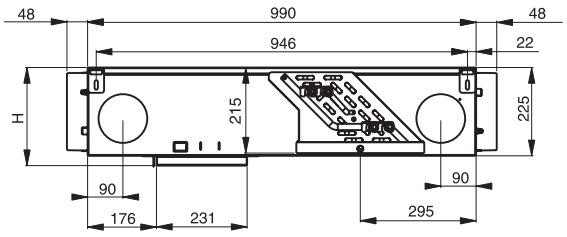

Right-hand connections

42EM3xC...
42EM3xD...

	H
42EM Size 3.0	225
42EM Sizes 3.1, 3.2, 3.3	250

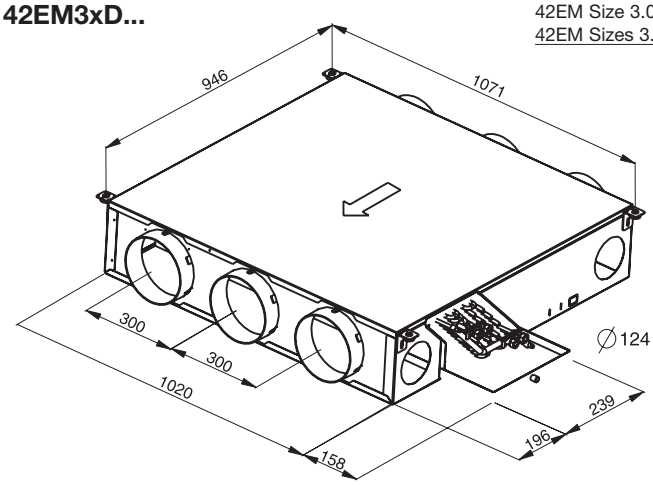

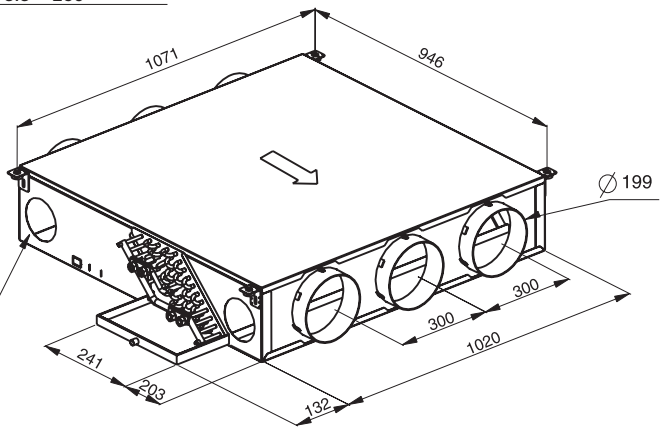

3 - SAFETY CONSIDERATIONS

3.1 - General

Installing, commissioning and servicing of the various components which make up the different control loops can be dangerous unless certain aspects of the installation, such as the presence of mains electricity and hot or chilled-water in the air conditioning equipment, are taken into account.

Only specially trained and qualified technicians and installers who have been fully trained on the product concerned are authorised to install, commission and service this equipment.

During servicing work, it is essential to apply all recommendations and instructions given in service leaflets, on labels or in the instructions delivered with the equipment, and to comply with any other relevant instructions.

Definition of the pictograms used

Electrical Danger

Caution hand hazard

General Danger

UV-C light: do not look directly at this light without protective glasses.

Comply with all the safety rules and regulations currently in force.

Wear eye protectors and work gloves.

Take care when moving or positioning equipment.

3.2 - Precautions against electrocution

Only electricians who are qualified to the level recommended by the IEC (International Electrotechnical Commission) in its standard IEC 364, corresponding to Europe HD 384, France NFC 15 100 and UK IEE Wiring Regulations, may have access to electrical components. In particular it is obligatory to disconnect all electrical power supplies to the unit and its accessories before carrying out any work. Disconnect the main power supply with an isolating device (not supplied by Carrier).

IMPORTANT: The components, which make up the different control loops described in this manual include electronic items. As such, they may generate or be harmed by electromagnetic interference unless they are installed and used in accordance with these instructions. The components making up these control systems conform to the requirements of electromagnetic compatibility in residential and industrial areas. They also comply with the low-voltage directive.

3.3 - General installation recommendations

IMPORTANT: The controllers must have an isolating device upstream (for example a double-pole circuit breaker). If neces-sary, an easily operated emergency stop device (such as a punch-button switch) must cut off the power to all equipment. These safety devices shall be sized and installed in accordance with IEC Recommendation 364, corresponding to Europe HD 384, France NFC 15 100 and UK IEE Wiring Regulations. These devices are not supplied by Carrier.

In general terms the following rules must be applied:

- Units must be provided with over-voltage protection upstream (not supplied by Carrier)

	Upstream over-voltage protection
Unit without electric heater	T2A
Standard unit size 1.0/2.1/3.1 with electric heater	T10A
Standard unit size 2.2/2.3/3.2/3.3 with electric heater	T16A

- Units must be protected by a differential type earth leakage current device (not supplied by Carrier).
- The power disconnection device must be clearly labelled to identify which items of equipment are connected to it.
- The wiring of the components which make up the different control systems and the communication buses must be carried out in accordance with the latest rules and regulations by professional installers.
- The power supply cable must be doubly insulated and fixed using an appropriate cable clamp or the cable clamp supplied with the Maestro controller. The cable must be clamped on the outer insulation.
- The control loop components must be installed in an environment, which conforms to their index of protection (IP).

The maximum level of pollution is normally pollutant (level 2) and installation category II.

- The low-voltage wiring (communication bus) must be kept physically separate from the power wiring.
- In order to avoid interference with the communication links:
  - Keep low-voltage wiring away from power cables and avoid using the same cable run (a maximum of 300 mm in common with the 230 V a.c., 30 A cable).
  - Do not pass low-voltage wires through loops in the power cables.
  - Do not connect heavy inductive loads to the same electrical supply (circuit breaker) used by the controllers, power modules or speed controllers.
  - Use the screened cable type recommended by Carrier and make sure all cables are connected to the controllers and power modules.

3.4 - Conformity

This equipment has been declared to be in conformity with the main requirements of the directive by virtue of using the following standards:

- Electromagnetic compatibility: 89/336/EEC
- Low-voltage directive: 73/23/EEC

4 - MAIN COMPONENTS

4.1 - Fresh air controller

4.1.1 - Constant fresh air controller

The 42EM Atmosphera can be fitted with a constant fresh air flow controller allowing the introduction of fresh air and the air change rate to be controlled. It is essential that the selection of the regulator takes into account the intended usage of the room.

The following range of fresh air controllers is available:

Option a: 8.3 l/s (30 m^3/h) (-10%; +20%) (size 1)
Option b: 16.6 l/s (60 m^3/h) (-10%; +20%) (sizes 1, 2 and 3)
The fresh air supply is located upstream of the water coil.
Options a and b: the diameter of the spigot housing the fresh air flow controller is 125 mm.

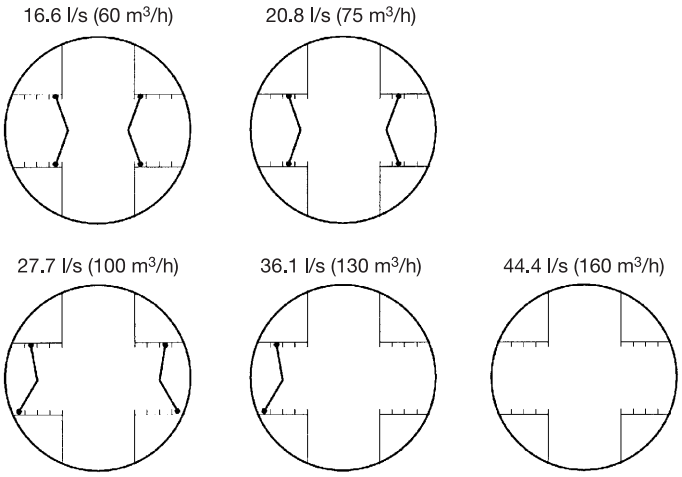

The 16.6 1/s (60 m^3/h) or fresh air controller may be modified on site by relocating or removing two plastic restrictors in order to increase the maximum constant fresh air flow capacity to 44.4 1/s (160 m^3/h).

A label on the 42EM shows how to adjust the two plastic restrictors.

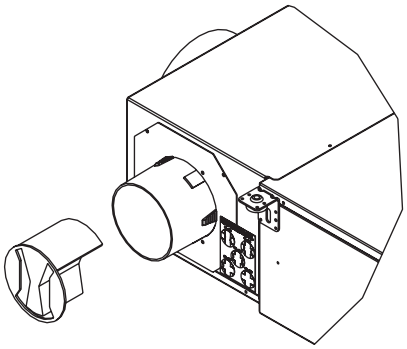

IMPORTANT: If the Atmosphera is fitted with a return air temperature sensor, the constant fresh air flow rate must not exceed 50% of the unit supply air flow rate at minimum speed.

NOTE: To operate correctly, the 30 m^3/h or 8.3 l/s constant fresh-air flow controller requires a differential pressure in the range of 50 Pa to 200 Pa. The 60 m^3/h or 16.6 l/s constant fresh-air flow controller requires a differential pressure in the range of 70 to 200 Pa.

4.1.2 - Variable fresh air controller

The 42EM Atmosphera can be equipped with an optional variable fresh air flow controller from 0 to 55 l/s (0 to 200 m^3/h). This is connected to the numeric Carrier controller and can regulate the fresh air intake in two ways:

- either using a fixed rate set by the installer that can be reconfigured as required
- or based on the CO_2 level; in this case it is connected to a CO_2 sensor via the Carrier numeric controller.

NOTE: With the variable fresh air flow controller the upstream pressure in the fresh air duct must be 180 Pa.

4.2 - Filter and filter access

The Carrier Atmosphera is fitted with a 85% gravimetric filter (G3), according to standard EN 779.

Medium fire rating M1, metal wire frame.

Different filter access options are available to suit different site requirements:

- Unit with non-ducted return air:
  - Access is from the rear of the unit.

- Unit with ducted return air:
  - Access is from below.

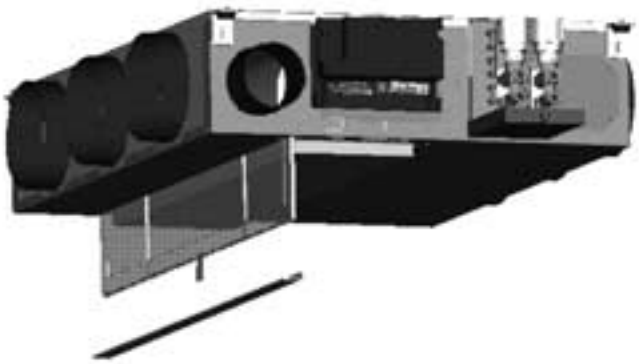

4.3 - Water coil

The water coil has aluminium fins mechanically bonded by expansion onto copper tubes.

Water inlet and outlet connections are 1/2” BSP union nuts (female). Air purge valves are standard. The coil is integral with the drain pan and coil access door to ease of removal during service and maintenance.

NOTE: The connection side for the coil can be changed on site, by turning the coil. Remember to reverse the water entering/leaving sides for size 3 (42EM models 3.0, 3.1, 3.2 and 3.3).

Coils available are:

- 2 rows for two-pipe changeover systems or for use with electric heater.
- 4-row systems.

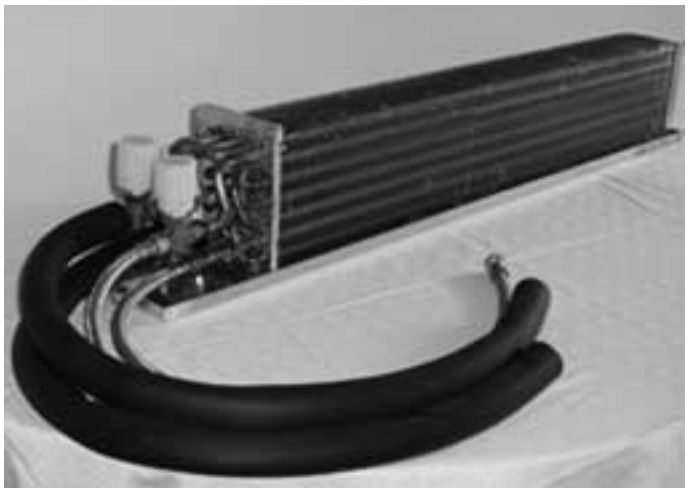

4.4 - Aluminium condensate drain pan

The main drain pan below the coil and the auxiliary drain pan below the valves are of one-piece construction to avoid the risk of leaks. The coil is located on the discharge side of the fan to facilitate the condensate removal and prevent the risk of bacteria build-up. condensate removal is via an opening in the base of the coil protection plate.

Auxiliary drain pan insulation: foam, fire class M1.

Condensate drain connection: 16 mm external diameter.

4.5 - Electric heater

Electric heater-resistance wire type

- Supply voltage: 230 V - 1 ph - 50 Hz
- Heater size and capacity per unit:
  - Size 1.0: 1 x 500 W (+5%; -10%)
  - Sizes 2.0, 3.0, 2.1, 3.1: 2 x 500 W (+5%; -10%)
  - Sizes 2.2, 3.2, 2.3, 3.3: 2 x 1000 W (+5%; -10%)
- Each heater is protected with double temperature protection:

a) Safety thermostat - resetable type. Trip temperature 75°C. When the trip temperature is reached a thermostat heater is energised that prevents auto resetting of the thermostat as long as the power is switched on and there is no air flow. Resetting of the thermostat is achieved by switching off the power supply to the heater. The safety thermostat protects the unit against overheating due to the operation of the electric heater with no or low air flow.

b) Thermofuse link - fusing temperature 167°C.

NOTE: Minimum air flow must be maintained to avoid damaging the electric heaters:

- ***Unit size 1.0: minimum air flow 28 l/s (100 m³/h)***
- ***Unit sizes 2.0, 3.0, 2.1, 3.1: minimum air flow 42 l/s (150 m³/h)***
- ***Unit sizes 2.2, 3.2, 2.3, 3.3: minimum air flow 55 l/s (200 m³/h)***

WARNING: Disconnect the power supply before carrying out any work on the unit.

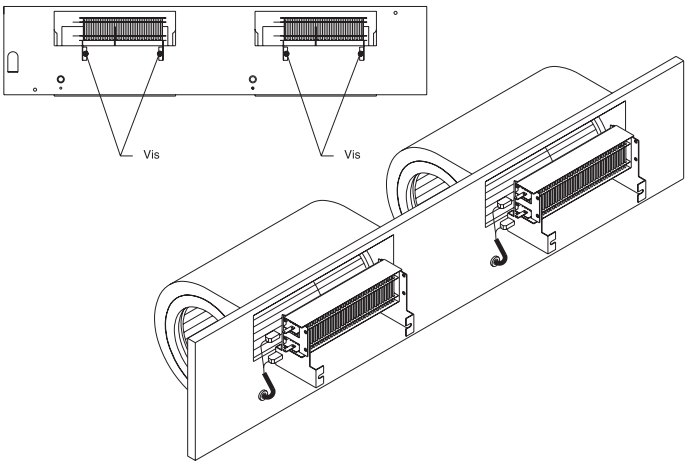

4.6 - Fan motor assembly

4.6.1 - Codification

42EM 1 0 XXXXX....

- Unit size (chassis): 1, 2 or 3
- Fan motor assembly size: 0, 1, 2, 3

The 42EM Atmosphera size 1 has a multi-speed fan motor assembly (size 0) with forward-curved, double-inlet, single-wheel fans.

The 42EM Atmosphera size 2 or 3 can be equipped with four fan-motor assembly sizes (0, 1, 2 or 3), depending on the required air flows/pressures. Sizes 2.0 and 3.0 are equipped with the same fan motor assembly; it is the same for sizes 2.1/3.1, 2.2/3.2 and 2.3/3.3. This is a multi-speed fan motor assembly (size 0) with forward-curved, double-inlet, double-wheel fans.

The fan motor has 6 speeds, provided by a multi-winding electric motor. Three speeds must be selected to allow connection of the fan motor in accordance with the applicable electro-mechanical or electronic regulations.

Minimum speed: terminal 6
Maximum speed: terminal 1

- As standard, 42EM units are prewired to the factory settings, for speeds 1, 3 and 5.
- For other fan motor speed wiring combinations refer to the unit codification.

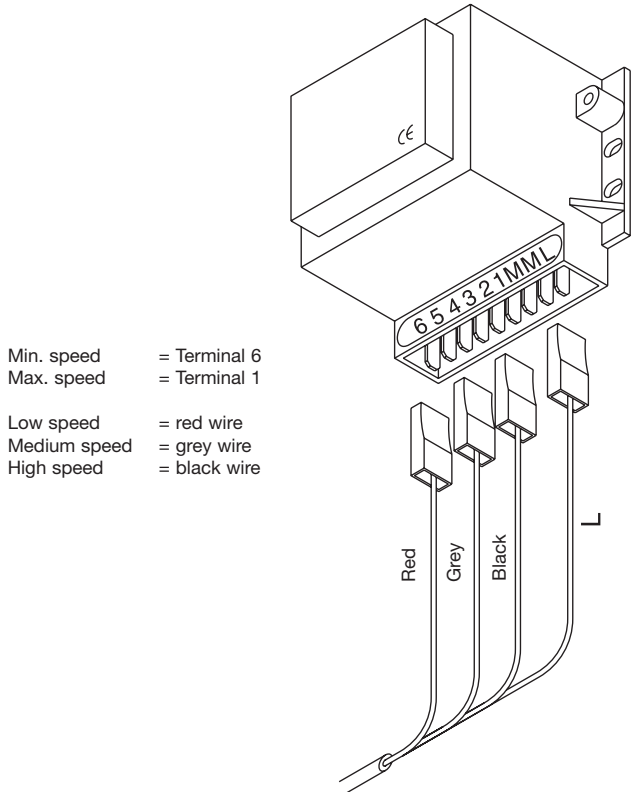

4.6.2 - Maintenance/access

1. Remove the door.

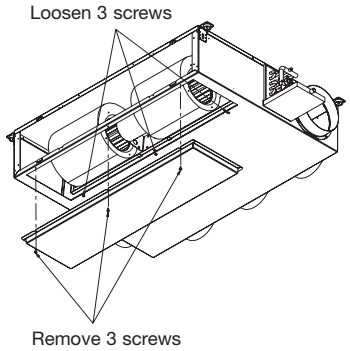

2. Remove the fan motor assembly.

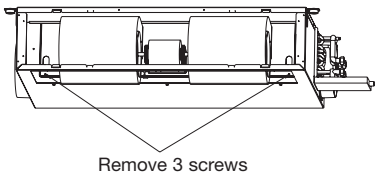

NOTE: In order to simplify maintenance, the fan motor assembly is fixed by 2 screws.

5 - DIFFERENT ATMOSPHERA CONFIGURATIONS

Each Atmosphera can be fitted with one or two on/off valves (two or three port) and flexible water pipes, depending on the coil configuration.

a) The Atmosphera is equipped with a multi-speed fan motor and a 3-row coil for cooling (2-pipe system).

Operates in “cooling” mode only

This option includes a 2-port on/off valve and two insulated flexible water pipes.

b) The Atmosphera is equipped with a multi-speed fan motor and a 3-row coil for cooling and heating (2-pipe system with changeover).

Operates in cooling or heating mode: heat pump type applications.

This option includes a 3-port on/off valve, a heating/cooling changeover switch and two insulated flexible water pipes.

c) The Atmosphera is equipped with a multi-speed fan motor and a 3-row cooling coil and 1-row heating coil (4-pipe system).

Operates in cooling or heating mode as required.

This option includes two 2-port on/off valves, and two insulated and two uninsulated flexible water pipes.

d) The Atmosphera is equipped with a multi-speed fan motor and a 3-row cooling coil and an electric heater (2-pipe, 2-wire system).

Operates in sequenced cooling or electrical heating mode.

This option includes a 2-port on/off valve, and two insulated flexible water pipes.

6 - CONTROL

The Atmosphera can be controlled by a Carrier room thermostat, but also by Carrier numeric controllers, installed on the 42EM and tested in the factory. On special request, other types of controllers can be factory-installed on the units (supplied by Carrier).

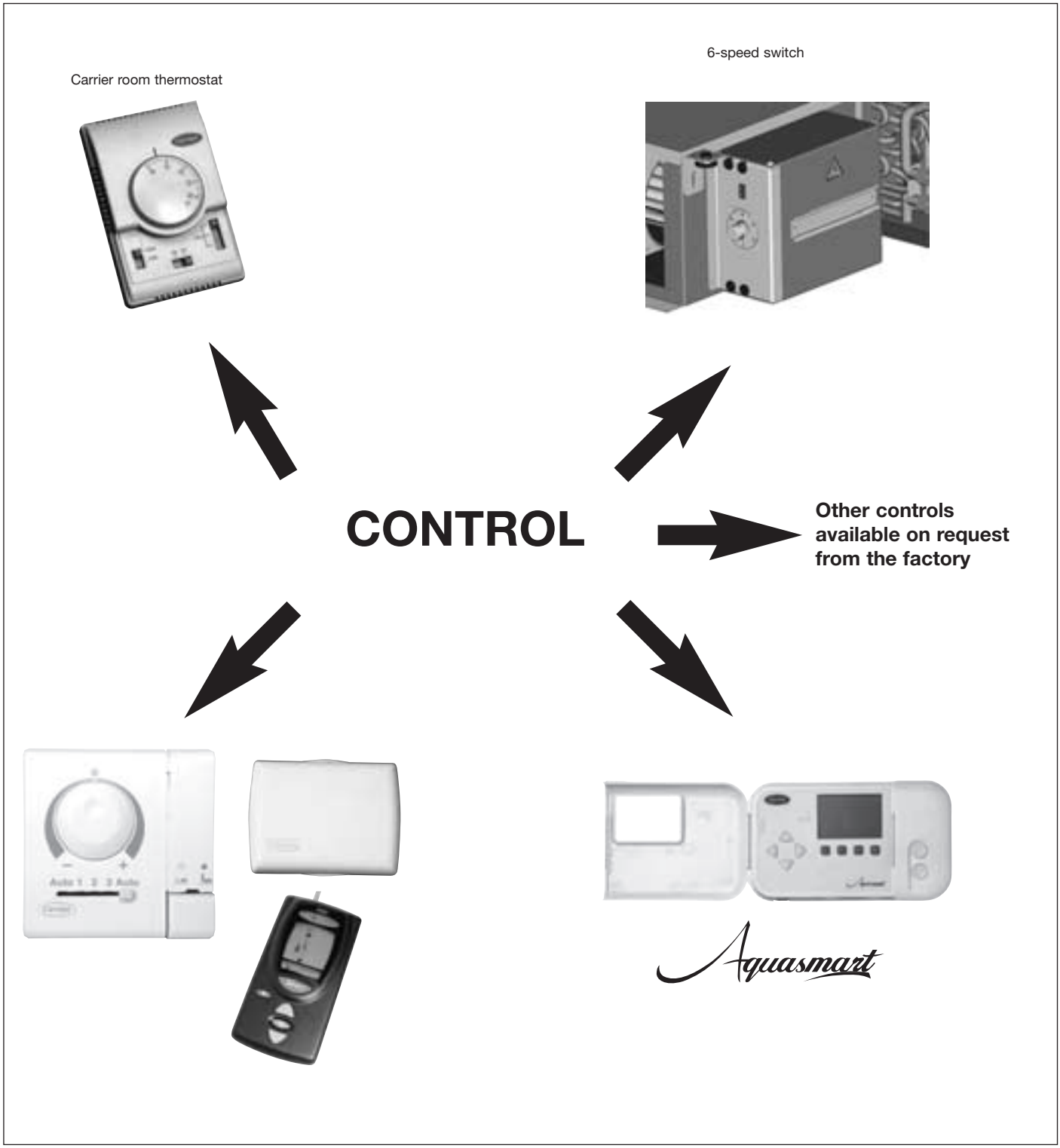

NOTE : For further details on the Carrier controllers, mentioned above, please refer to the technical documentation on each of these controllers.

6.1 - Control with room thermostat only

The 42EM Atmosphera can be controlled by a Carrier room thermostat.

6.1.1 - Standard configuration

The 42EM Atmosphera can be equipped with a plug-in quick-connect terminal board to connect the various cables:

- from the fan motor assembly
- from the valve actuator(s)
- from the electric heater
- from the heating/cooling changeover valve (if used - this is the changeover contactor for the 42EM configuration with cooling or heating only coil).

This plug-in quick-connect terminal board is installed on a DIN rail and protected by a plastic cover.

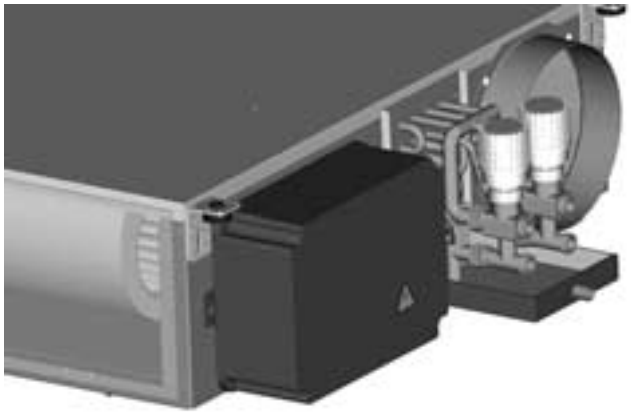

6.1.2 - Other possible configurations

6.1.2.1 - 6 speeds on external terminal board

For certain applications, the 42EM Atmosphera can be equipped with **metal box** incorporating a plug-in quick-connect terminal board to connect the various cables:

- from the fan motor assembly
- from the valve actuator(s)
- from the electric heater
- from the heating/cooling changeover valve (if used - this is the changeover contactor for the 42EM configuration with cooling or heating only coil).

With this option the six fan motor speeds are available from this terminal.

This plug-in quick-connect terminal board is installed on a DIN rail.

In addition a fuse is also installed on this DIN rail and an ON/OFF switch is included on the metal box.

In this version the Atmosphera can operate in three fan speed mode, controlled by a Carrier room thermostat (controlling three speeds of the six speeds available on the unit terminal board).

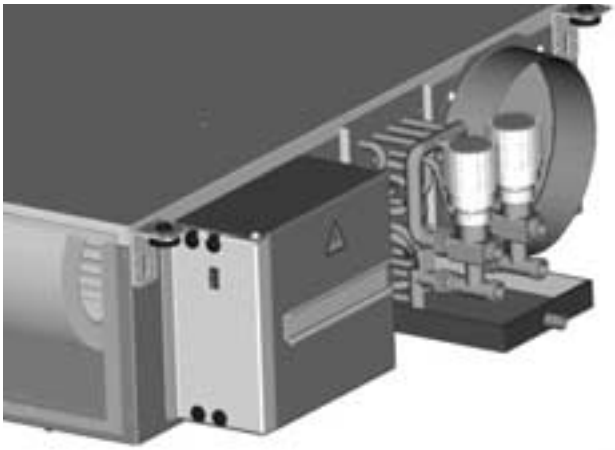

6.1.2.2 - 6-speed switch

For certain applications, the 42EM Atmosphera can be equipped with a six-position speed selector installed on a metal box incorporating a plug-in quick-connect terminal board to connect the various cables from the fan motor assembly, the valve actuator(s). the electric heater and from the heating/cooling change-over valve (if used - this is the changeover contactor for the 42EM configuration with cooling or heating only coil).

This plug-in quick-connect terminal board is installed on a DIN rail.

In addition a fuse is also installed on this DIN rail and an ON/OFF switch is included on the **metal box**.

In this version the customer selects the desired speed directly on the unit, and the room thermostat controls the opening and closing of the cooling and heating valves.

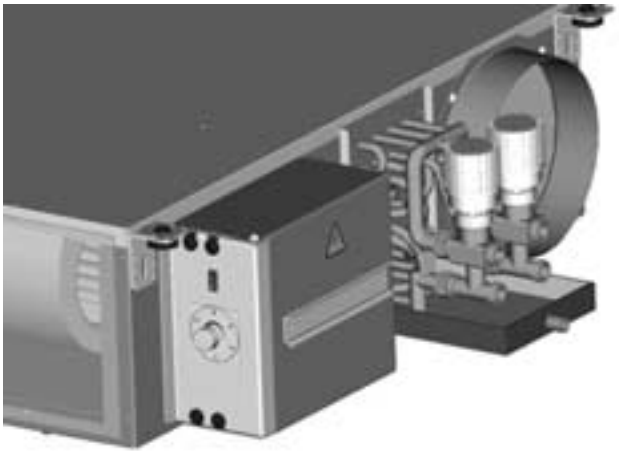

7 - TECHNICAL SPECIFICATIONS

7.1 - Valves

It should be noted that the valve body is the same for whatever controller option is chosen.

7.1.1 - Electrothermal actuator (on/off)

This ON/OFF type 230 V a.c. actuator is used with Carrier numeric controllers and Carrier electronic room thermostats.

7.1.1.1 - Features

- Compact design, small size
- Long service life
- Easy installation, without tools
- Completely silent operation
- Connection cable included

7.1.1.2 - Operation

Linear movement is provided by the expansion and contraction of a wax element heated by an electrical resistor.

7.1.1.3 - Specifications

	24 V a.c. actuator
Power supply	230 V a.c. (±15%) 1 ph - 50 Hz
Activating current	0.7 A
Holding current	0.013 A
Power	3 W
Maximum travel	8 mm
Operating temperature	0 to 50°C
Degree of protection	IP43 if installed vertically IP40 if installed horizontally
Opening time	4 min.
Closing time	Maximum 7 max. depending on actuator heating-up time (ambient temp. 20°C)
Connecting cable	1 m, 2 x 1 mm^2
Dimensions	Diameter 50 mm Height 75 mm
Permitted differential pressure	
• 2-way valve (Kvs = 1 or 2.5)	2.5 bar
• 3-way valve (Kvs = 1)	1.5 bar
Logic	NF valve, closed if no voltage

7.1.2 - Two-way valve body

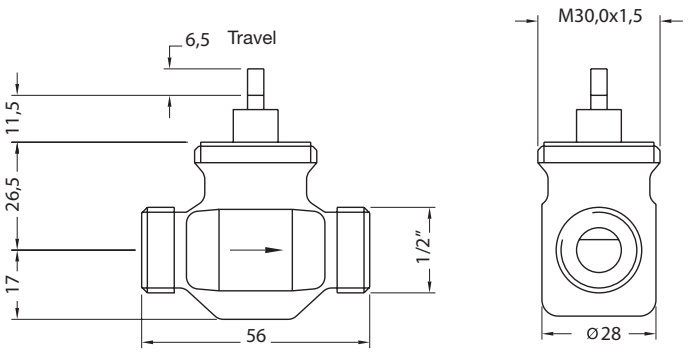

7.1.2.1 - Features of the 1/2" two-way valve

- 1/2" male BSP connection for union nuts
- Straight valve body in bronze with arrow indicating direction of flow embossed on valve body.
- Stainless steel stem
- Brass valve
- Nominal size 15
- Kvs value: 1
- Fluid: water and glycol solution (max. 40% glycol)
- Temperature: 2-90°C
- Leak rate: 0.02% of Kvs
- Travel: 6.5 mm
- Closing height: 18 mm
- Flow curve: linear
- Nominal pressure: PN 16 bar

7.1.2.2 - Water pressure drop

Refer to chapter 9.4 'Water valve pressure drops'.

7.1.3 - Three-way valve body (with integral bypass)

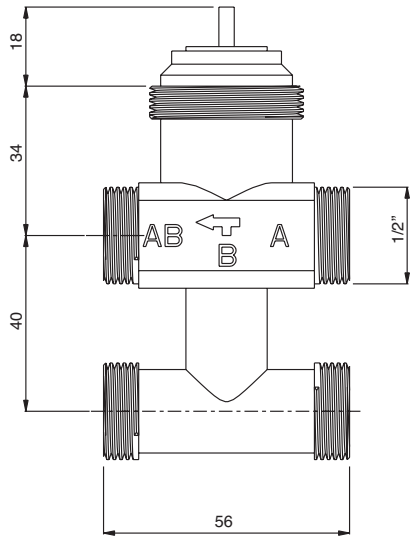

7.1.3.1 - Features of the 1/2" three-way valve

- 1/2" male BSP connection for union nuts
- Straight valve body in bronze with arrow indicating direction of flow embossed on valve body.
- Stainless steel stem
- Brass valve
- Nominal size 15
- Kvs value: flow A-AB = 1, bypass B-AB = 0.63
- Fluid: water and glycol solution (max. 40% glycol)
- Temperature: 2-90°C
- Leak rate: 0.02% of Kvs
- Travel: 6.5 mm
- Closing height: 18 mm
- Flow curve: equal percentage A-AB, linear for bypass B-AB
- Nominal pressure: PN 16 bar

7.1.3.2 - Water pressure drop

Refer to chapter 9.4 'Water valve pressure drops'.

7.2 - Flexible water pipes

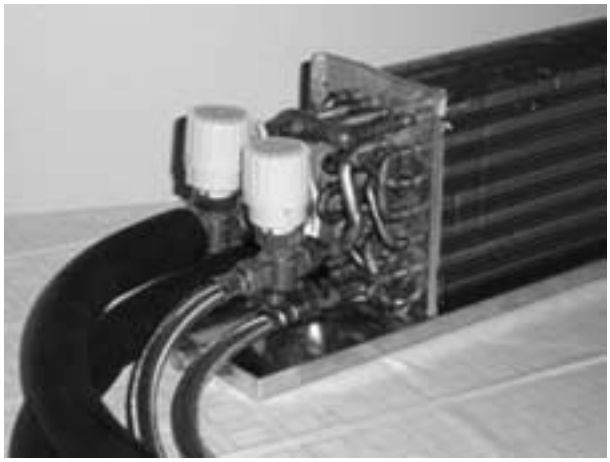

7.2.1 - Materials

- Pipes: MEPD-based elastomer (modified ethylene-propylene-diene)
- Braid: 304L stainless steel
- Insulation: cellular foam rubber with M1 fire rating (9 mm thick, chilled water pipes only).

7.2.2 - Characteristics

- Minimum bending radius: non-insulated 35 mm, insulated 75 mm
- Ten-year guarantee
- The flexible water pipes are designed for treated or untreated water (maximum 40% ethylene glycol or propylene glycol).
- Maximum hot water temperature 90°C
- Maximum operating pressure: 16 bar
- Test pressure: 24 bar
- 1/2” flat gas connections
- Length: 1 m.

7.3 - Technical specification for the heating/cooling changeover switch

The heating/cooling changeover switch is designed to be installed straight onto the couplings of the 3-way valves on the thermostat. It detects temperature changes in the fluid circulating in the primary water circuit. A changeover switch operates according to the water temperature in accordance with the diagram below.

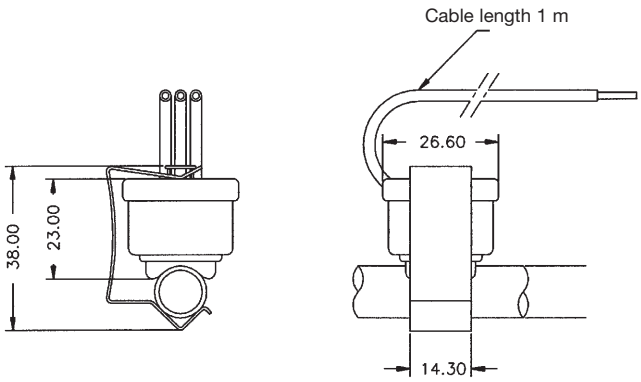

When a heating/cooling changeover switch is connected between the room thermostat and the water flow control valve, the changeover between heating and cooling modes takes place automatically in accordance with the following diagram.

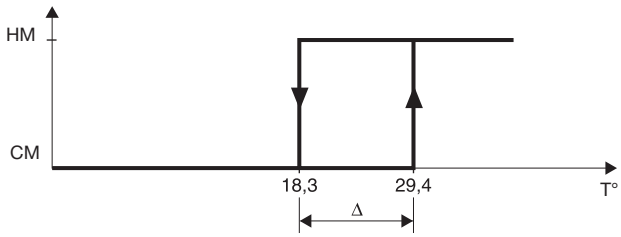

Δ: Differential 11.1 K ± 3.3
CM: Cooling mode
HM: Heating mode
T°: Water temperature in °C

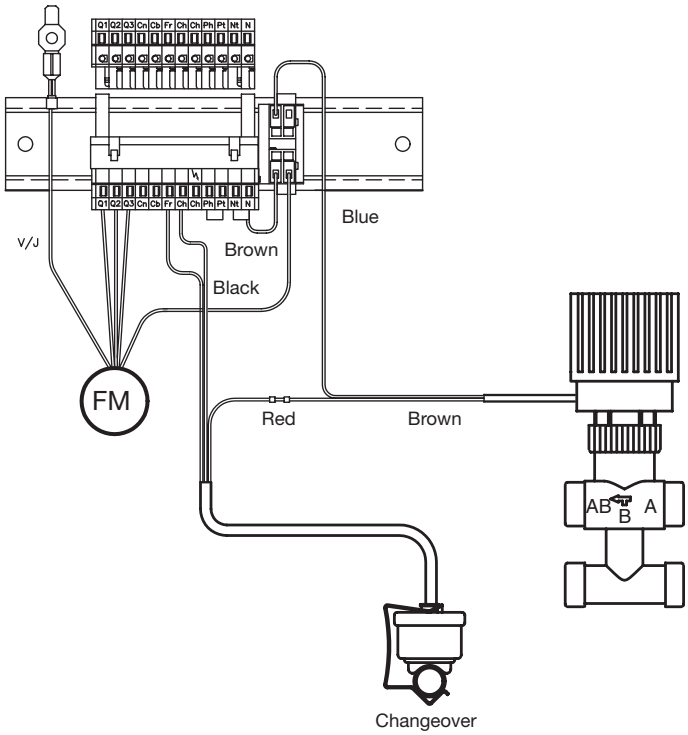

8 - ACCESSORIES

A broad range of accessories is available in order to simplify the installation of the Atmosphera.

8.1 - Carrier electronic thermostat

Elegant room thermostat, blending in with most room decors. Two models available: one with a manual heating (winter)/ cooling (summer) selector, and the other with an automatic switch. Both are for 2-pipe, 2-pipe changeover, 4-pipe or 2-pipe plus electric heater systems.

8.2 - Maestro Zone User Interface

Zone User Interface supplied with 3 m of cable complete with connector and user handbook.

It allows the following functions:

- Change of mode (occupied/unoccupied)
- Change temperature set point in the occupied mode
- Display fan operating mode, ambient temperature (programmable) and set point offset requested by the user.

8.3 - Wall-mounted base for Zone User Interface

Wall-mounted base supplied without fixing screws, as these vary depending on the type of the support surface to which the base will be fastened (metal, wood, plaster etc.).

The Zone User Interface is held in the base by a system of grips and a “velcro” fastener.

8.4 - Maestro wall-mounted sensor

Wall-mounted room sensor protected by a beige plastic cover.

8.5 - Three-speed wall-mounted thermostat for the numerical Maestro controller

The wall thermostat has the following functions:

- Measuring the ambient temperature via a sensor inside the box
- Temperature set point reset (set in the Maestro controller to a value of ± 3 K) by turning the knurled button
- Selection of the air conditioning mode using the push button
- Fan speed selection in the occupied mode via a five-position selector.

8.6 - Condensate drain pump

8.6.1 - Introduction

Atmosphera units can be fitted with condensate drain pumps, preferably before but if necessary after the unit has been installed in the false floor or ceiling.

8.6.2 - Operation

The condensate level detector consists of a float, which can detect three different condensate levels:

- Pump on level: 17 mm ± 2 mm of condensate. When this level is exceeded the pump will start automatically.
- Pump-off level: 11 mm ± 2 mm of condensate. When the pump has been operating, it will switch off when the level falls below this threshold.

Alarm level: 21 mm ± 2 mm of condensate. When this level is reached a volt-free contact operates which can be connected to an external alarm. If the alarm threshold is reached or exceeded, the condensate drain pump keeps running.

The alarm condition applies if the condensate level is above the alarm threshold.

The alarm condition no longer applies when the level is below the alarm threshold.

The device includes a volt-free changeover switch with a capacity of 8 A/250 V (resistive load).

The alarm contact on the drain pump is a “Normally Open” or “Normally Closed” type, and therefore:

If the condensate level is below the alarm threshold (no alarm condition), the contact is open if the wiring is NO or closed if the wiring is NC.

If the condensate level is above the alarm threshold (alarm condition), the contact is closed if the wiring is NO or open if the wiring is NC.

8.6.3 - Features of the condensate drain pump

Maximum flow:	10 l/h (0.0027 l/s)
Maximum discharge:	60 kPa
Maximum suction:	25 kPa
Power supply:	230 V ± 10%/50 Hz/1 ph.
Power consumption:	18 VA.

9 - ATMOSPHERA PERFORMANCE DATA

9.1 - Cooling capacity - water coil

9.1.1 - Size 1

		Size 1.0																				
		Relative humidity 50%																				
Water		Air flow l/s (m³/h)																				
temp. (°C)		56 (200)			83 (300)			111 (400)			139 (500)			167 (600)			180 (650)			194 (700)		
entering/		Dry bulb temperature at coil inlet (°C)																				
leaving		27	25	23	27	25	23	27	25	23	27	25	23	27	25	23	27	25	23	27	25	23
6-11	TC	1.72	1.38	1.07	2.46	1.98	1.54	3.15	2.53	1.98	3.80	3.05	2.38	4.40	3.52	2.76	4.67	3.74	2.93	4.95	3.96	3.10
	SHC	1.14	1.01	0.88	1.66	1.47	1.28	2.15	1.91	1.67	2.62	2.33	2.04	3.07	2.73	2.39	3.27	2.91	2.55	3.49	3.10	2.72
	TSA	9.8	9.9	10	10.3	10.3	10.3	10.8	10.7	10.6	11.2	11.1	10.9	11.6	11.4	11.2	11.7	11.5	11.3	11.9	11.7	11.4
	DE	295	237	184	422	340	264	541	435	340	652	523	409	756	605	474	802	642	503	850	681	533
6-12	TC	1.58	1.24	0.95	2.26	1.78	1.36	2.90	2.29	1.76	3.48	2.75	2.13	4.02	3.18	2.48	4.26	3.37	2.64	4.51	3.57	2.80
	SHC	1.08	0.95	0.82	1.57	1.38	1.19	2.04	1.80	1.56	2.49	2.20	1.91	2.91	2.57	2.25	3.10	2.74	2.40	3.31	2.92	2.56
	TSA	10.8	10.9	10.8	11.2	11.2	11.1	11.6	11.5	11.4	12	11.9	11.6	12.4	12.2	11.9	12.6	12.3	12	12.7	12.5	12.1
	DE	226	178	136	324	255	195	415	328	252	498	394	305	575	455	355	610	482	378	646	511	400
7-12	TC	1.56	1.23	0.94	2.23	1.76	1.34	2.86	2.25	1.73	3.44	2.71	2.10	3.98	3.13	2.43	4.22	3.32	2.58	4.47	3.52	2.74
	SHC	1.07	0.94	0.82	1.56	1.37	1.19	2.02	1.78	1.55	2.47	2.18	1.90	2.89	2.55	2.23	3.08	2.72	2.38	3.29	2.91	2.54
	TSA	10.9	11	10.9	11.3	11.3	11.2	11.7	11.6	11.5	12.1	12	11.7	12.5	12.3	12	12.6	12.4	12.1	12.8	12.5	12.2
	DE	268	211	161	384	302	231	491	387	297	591	466	360	684	538	418	725	571	444	769	605	471
7-13	TC	1.42	1.10	0.83	2.03	1.57	1.19	2.60	2.01	1.54	3.12	2.43	1.88	3.60	2.81	2.19	3.82	2.98	2.33	4.04	3.16	2.48
	SHC	1.01	0.88	0.76	1.47	1.28	1.11	1.92	1.67	1.44	2.34	2.05	1.77	2.74	2.41	2.08	2.92	2.57	2.22	3.11	2.74	2.37
	TSA	11.8	11.9	11.7	12.2	12.2	12	12.6	12.5	12.3	12.9	12.7	12.5	13.3	13	12.7	13.4	13.1	12.8	13.6	13.3	12.9
	DE	203	157	119	290	224	171	373	288	221	447	348	269	516	403	314	547	427	334	579	453	356
8-13	TC	1.40	1.08	0.81	2.00	1.54	1.17	2.56	1.98	1.51	3.07	2.39	1.84	3.56	2.76	2.15	3.77	2.93	2.29	3.99	3.10	2.43
	SHC	1.01	0.88	0.76	1.46	1.27	1.10	1.90	1.66	1.43	2.32	2.03	1.76	2.72	2.39	2.07	2.90	2.55	2.20	3.09	2.72	2.35
	TSA	11.9	12	11.8	12.3	12.3	12.1	12.7	12.5	12.3	13.1	12.8	12.6	13.4	13.1	12.8	13.5	13.2	12.9	13.7	13.4	13
	DE	241	185	140	344	265	201	440	341	260	529	410	317	611	474	370	648	503	393	687	534	418
10-15	TC	1.08	0.81	0.64	1.55	1.17	0.92	1.98	1.51	1.19	2.38	1.84	1.46	2.76	2.14	1.71	2.92	2.28	1.83	3.10	2.43	1.95
	SHC	0.87	0.75	0.63	1.27	1.10	0.92	1.66	1.43	1.19	2.03	1.76	1.46	2.38	2.06	1.71	2.54	2.20	1.83	2.71	2.35	1.95
	TSA	14.0	13.8	13.6	14.2	14	13.9	14.5	14.3	14.1	14.8	14.5	14.3	15.1	14.7	14.5	15.2	14.8	14.6	15.3	14.9	14.7
	DE	186	140	110	266	201	158	342	260	206	410	317	251	474	369	295	503	393	315	534	417	335

Legend:
TC - Total cooling capacity (kW)
SHC - Sensible cooling capacity (kW)
TSA - Supply air temperature (°C)
DE - Water flow rate (l/h)

NOTE: To convert l/h to l/s, divide by 3600.

NOTE: Operating limits: air discharge temperature 12°C when the unit is installed in an ambient temperature of 27°C dry bulb and 65% relative humidity.

9.1 - Cooling capacity - water coil

9.1.2 - Size 2

		Size 2.0, 2.1						Size 2.2									Size 2.3					
		Relative humidity 50%																				
Water		Air flow l/s (m³/h)																				
temp. (°C)		83 (300)			125 (450)			167 (600)			208 (750)			264 (950)			319 (1150)			347 (1250)		
entering/		Dry bulb temperature at coil inlet (°C)																				
leaving		27	25	23	27	25	23	27	25	23	27	25	23	27	25	23	27	25	23	27	25	23
6-11	TC	2.62	2.11	1.63	3.78	3.05	2.36	4.87	3.92	3.05	5.86	4.70	3.67	7.12	5.70	4.45	8.25	6.60	5.16	8.80	7.04	5.50
	SHC	1.73	1.53	1.33	2.53	2.24	1.95	3.29	2.92	2.55	4.01	3.55	3.11	4.93	4.38	3.84	5.79	5.14	4.51	6.21	5.52	4.84
	TSA	9.5	9.7	9.8	10.0	10.1	10.1	10.5	10.5	10.4	10.9	10.8	10.7	11.4	11.2	11.0	11.8	11.6	11.3	12.0	11.8	11.5
	DE	450	362	281	650	524	405	836	673	524	1007	808	630	1223	979	764	1418	1134	886	1512	1209	945
6-12	TC	2.42	1.90	1.46	3.49	2.74	2.10	4.48	3.54	2.72	5.38	4.25	3.29	6.51	5.13	4.01	7.53	5.93	4.65	8.02	6.31	4.97
	SHC	1.64	1.44	1.25	2.40	2.11	1.83	3.13	2.75	2.39	3.80	3.35	2.93	4.67	4.13	3.61	5.49	4.85	4.25	5.89	5.20	4.56
	TSA	10.5	10.6	10.6	10.9	11.0	10.9	11.3	11.3	11.2	11.7	11.6	11.4	12.2	12.0	11.7	12.6	12.4	12.0	12.8	12.5	12.2
	DE	346	272	209	500	393	301	642	507	390	770	608	471	932	735	574	1078	849	666	1148	904	711
7-12	TC	2.38	1.87	1.43	3.44	2.71	2.07	4.42	3.48	2.68	5.31	4.18	3.23	6.44	5.05	3.93	7.46	5.85	4.56	7.95	6.23	4.87
	SHC	1.62	1.42	1.24	2.38	2.09	1.81	3.10	2.73	2.38	3.77	3.32	2.90	4.64	4.10	3.58	5.45	4.82	4.21	5.86	5.17	4.52
	TSA	10.6	10.7	10.7	11.0	11.1	11.0	11.5	11.4	11.3	11.8	11.7	11.5	12.3	12.1	11.8	12.7	12.5	12.1	12.9	12.6	12.2
	DE	410	322	246	591	465	355	760	598	460	913	718	555	1106	869	675	1281	1005	784	1366	1072	838
7-13	TC	2.17	1.67	1.28	3.14	2.41	1.85	4.03	3.11	2.39	4.82	3.75	2.90	5.83	4.54	3.55	6.73	5.25	4.14	7.17	5.60	4.43
	SHC	1.53	1.34	1.16	2.25	1.96	1.70	2.93	2.57	2.22	3.57	3.13	2.72	4.39	3.86	3.36	5.16	4.54	3.95	5.53	4.88	4.24
	TSA	11.5	11.6	11.5	11.9	11.9	11.7	12.3	12.2	12.0	12.7	12.5	12.2	13.1	12.9	12.5	13.5	13.2	12.8	13.7	13.3	12.9
	DE	311	240	183	449	345	264	577	445	343	691	536	416	865	650	508	964	752	593	1027	802	634
8-13	TC	2.14	1.64	1.25	3.09	2.37	1.81	3.96	3.05	2.34	4.75	3.67	2.84	5.75	4.45	3.47	6.65	5.15	4.05	7.09	5.50	4.33
	SHC	1.52	1.32	1.15	2.23	1.94	1.68	2.90	2.54	2.21	3.54	3.10	2.70	4.36	3.83	3.33	5.12	4.50	3.91	5.50	4.84	4.20
	TSA	11.7	11.7	11.6	12.1	12.1	11.9	12.5	12.3	12.1	12.8	12.6	12.3	13.2	13.0	12.6	13.6	13.3	12.9	13.7	13.4	13.0
	DE	368	282	214	531	407	310	681	525	403	817	631	488	989	765	597	1144	886	696	1219	946	745
10-15	TC	1.65	1.24	0.97	2.38	1.80	1.42	3.05	2.34	1.84	3.67	2.83	2.25	4.44	3.46	2.77	5.15	4.04	3.25	5.50	4.32	3.48
	SHC	1.32	1.15	0.97	1.94	1.68	1.42	2.53	2.21	1.84	3.09	2.70	2.25	3.82	3.33	2.77	4.49	3.91	3.25	4.83	4.20	3.48
	TSA	13.7	13.5	13.4	14.0	13.8	13.6	14.3	14.0	13.9	14.6	14.3	14.1	14.9	14.6	14.4	15.2	14.8	14.6	15.4	15.0	14.7
	DE	283	214	167	409	310	244	526	402	318	631	487	387	765	596	477	886	695	559	946	743	599

9.1.3 - Size 3

		Size 3.0, 3.1						Size 3.2									Size 3.3					
		Relative humidity 50%																				
Water		Air flow l/s (m³/h)																				
temp. (°C)		83 (300)			125 (450)			167 (600)			208 (750)			264 (950)			319 (1150)			347 (1250)		
entering/		Dry bulb temperature at coil inlet (°C)																				
leaving		27	25	23	27	25	23	27	25	23	27	25	23	27	25	23	27	25	23	27	25	23
6-11	TC	3.00	2.49	2.01	4.39	3.63	2.93	5.71	4.72	3.80	6.93	5.72	4.61	8.48	6.98	5.62	9.92	8.15	6.55	10.61	8.71	7.00
	SHC	1.91	1.70	1.50	2.81	2.51	2.21	3.67	3.29	2.90	4.49	4.02	3.55	5.55	4.96	4.39	6.55	5.85	5.18	7.03	6.29	5.57
	TSA	7.7	7.9	8.0	8.1	8.2	8.3	8.5	8.6	8.6	8.9	8.9	8.9	9.4	9.3	9.2	9.8	9.7	9.6	10.0	9.9	9.7
	DE	516	428	346	754	624	503	980	811	653	1190	982	792	1457	1199	965	1704	1399	1125	1823	1496	1202
6-12	TC	2.88	2.36	1.88	4.20	3.43	2.72	5.46	4.46	3.53	6.60	5.40	4.27	8.04	6.57	5.22	9.38	7.66	6.08	10.02	8.17	6.49
	SHC	1.85	1.64	1.44	2.72	2.41	2.12	3.56	3.17	2.77	4.34	3.87	3.40	5.35	4.77	4.20	6.31	5.63	4.96	6.77	6.04	5.33
	TSA	8.3	8.5	8.6	8.7	8.9	9.0	9.1	9.2	9.2	9.5	9.5	9.5	10.0	9.9	9.8	10.4	10.3	10.2	10.6	10.5	10.3
	DE	413	338	269	601	492	390	781	639	505	945	773	612	1151	941	748	1342	1096	871	1434	1170	930
7-12	TC	2.78	2.27	1.79	4.06	3.30	2.60	5.26	4.29	3.37	6.38	5.18	4.09	7.79	6.32	4.98	9.10	7.37	5.81	9.71	7.88	6.21
	SHC	1.80	1.60	1.40	2.65	2.35	2.06	3.47	3.09	2.70	4.24	3.77	3.31	5.24	4.66	4.09	6.18	5.50	4.83	6.64	5.91	5.20
	TSA	8.8	9.0	9.0	9.2	9.3	9.3	9.6	9.6	9.6	9.9	9.9	9.9	10.4	10.3	10.2	10.8	10.7	10.5	11.0	10.8	10.6
	DE	477	389	308	697	567	446	905	736	579	1096	890	702	1339	1086	856	1564	1267	998	1670	1353	1067
7-13	TC	2.65	2.14	1.66	3.85	3.10	2.40	4.99	4.05	3.11	6.03	4.86	3.77	7.41	5.91	4.62	8.55	6.87	5.40	9.13	7.33	5.76
	SHC	1.74	1.54	1.34	2.56	2.26	1.97	3.35	2.98	2.58	4.09	3.63	3.16	5.07	4.48	3.92	5.94	5.28	4.63	6.38	5.67	4.98
	TSA	9.4	9.5	9.7	9.8	9.9	10.0	10.2	10.1	10.2	10.5	10.5	10.5	10.9	10.9	10.7	11.4	11.2	11.0	11.6	11.4	11.1
	DE	379	306	237	551	443	344	715	581	446	864	696	540	1061	847	662	1225	985	773	1308	1051	826
8-13	TC	2.54	2.04	1.57	3.70	2.96	2.30	4.80	3.84	2.95	5.80	4.64	3.59	7.08	5.65	4.39	8.26	6.59	5.13	8.82	7.03	5.48
	SHC	1.69	1.49	1.30	2.49	2.20	1.92	3.26	2.89	2.51	3.99	3.53	3.08	4.93	4.36	3.82	5.82	5.15	4.51	6.25	5.54	4.85
	TSA	9.9	10.0	10.1	10.2	10.3	10.3	10.6	10.6	10.6	10.9	10.9	10.8	11.4	11.3	11.1	11.7	11.6	11.3	11.9	11.7	11.4
	DE	437	350	270	637	509	395	825	661	508	998	799	617	1217	972	755	1420	1132	882	1517	1209	943
10-15	TC	2.06	1.57	1.19	2.99	2.29	1.73	3.87	2.95	2.26	4.67	3.59	2.75	5.68	4.38	3.39	6.61	5.11	3.99	7.06	5.47	4.28
	SHC	1.49	1.29	1.12	2.18	1.91	1.65	2.87	2.50	2.16	3.51	3.07	2.65	4.34	3.80	3.28	5.12	4.50	3.88	5.51	4.84	4.17
	TSA	12.0	12.1	11.9	12.3	12.3	12.1	12.6	12.5	12.3	12.9	12.8	12.5	13.3	13.0	12.7	13.6	13.3	13.0	13.7	13.4	13.1
	DE	354	270	204	514	395	298	666	508	388	804	617	473	978	754	583	1138	880	686	1215	941	736

Legend:
TC - Total cooling capacity (kW)
SHC - Sensible cooling capacity (kW)
TSA - Supply air temperature (°C)
DE - Water flow rate (l/h)

NOTE: To convert l/h to l/s, divide by 3600.

NOTE: Operating limits: air discharge temperature 12°C when the unit is installed in an ambient temperature of 27°C dry bulb and 65% relative humidity.

9.2 - Heating capacity - water coil

9.2.1 - Two-row changeover coil

Size 1

Water temp. (°C) entering/ leaving		Size 1.0																				
		Air flow l/s (m³/h)																				
		56 (200)			83 (300)			111 (400)			139 (500)			167 (600)			180 (650)			194 (700)		
		Dry bulb temperature at coil inlet (°C)																				
		21	20	19	21	20	19	21	20	19	21	20	19	21	20	19	21	20	19	21	20	19
70-60	HC	2.89	2.97	3.05	4.20	4.31	4.43	5.48	5.63	5.77	6.71	6.89	7.07	7.88	8.10	8.32	8.41	8.64	8.87	8.98	9.23	9.47
	TSA	63.2	63.1	63.1	62.2	62.1	62.1	61.2	61.1	61.1	60.3	60.2	60.1	59.5	59.4	59.3	59.1	59.0	58.9	58.8	58.6	58.5
	DE	254	261	268	369	379	389	481	494	508	589	605	622	693	712	731	740	760	780	789	811	833
60-50	HC	2.20	2.27	2.35	3.18	3.29	3.40	4.12	4.27	4.41	5.03	5.21	5.39	5.90	6.11	6.32	6.29	6.52	6.74	6.71	6.95	7.19
	TSA	53.0	53.0	53.0	52.1	52.1	52.0	51.3	51.2	51.2	50.5	50.4	50.4	49.8	49.7	49.6	49.5	49.4	49.3	49.2	49.1	49.0
	DE	192	199	206	278	288	297	361	374	386	440	456	472	516	535	553	551	570	590	587	608	629
55-40	HC	1.54	1.62	1.70	2.22	2.33	2.45	2.87	3.01	3.16	3.47	3.64	3.82	4.03	4.24	4.44	4.28	4.51	4.73	4.55	4.79	5.02
	TSA	43.5	43.5	43.6	42.8	42.8	42.8	42.1	42.0	42.0	41.3	41.3	41.2	40.7	40.6	40.6	40.4	40.3	40.3	40.1	40.1	40.0
	DE	90	94	99	129	136	143	167	175	184	202	212	222	235	247	259	250	262	275	265	279	293
50-40	HC	1.48	1.56	1.64	2.14	2.24	2.35	2.76	2.90	3.04	3.34	3.52	3.69	3.90	4.11	4.31	4.16	4.37	4.59	4.42	4.65	4.89
	TSA	42.6	42.7	42.7	41.9	41.9	41.9	41.2	41.2	41.1	40.6	40.6	40.5	40.1	40.0	39.9	39.8	39.7	39.7	39;6	39.5	39.4
	DE	129	136	143	186	196	205	240	253	265	292	307	322	340	358	376	362	381	400	386	406	426

Size 2

Water temp. (°C) entering/ leaving		Size 2.0, 2.1						Size 2.2									Size 2.3					
		Air flow l/s (m³/h)																				
		83 (300)			125 (450)			167 (600)			208 (750)			264 (950)			319 (1150)			347 (1250)		
		Dry bulb temperature at coil inlet (°C)																				
		21	20	19	21	20	19	21	20	19	21	20	19	21	20	19	21	20	19	21	20	19
70-60	HC	4.37	4.49	4.60	6.40	6.57	6.74	8.37	8.59	8.82	10.22	10.49	10.77	12.62	12.96	13.31	14.86	15.27	15.67	15.96	16.40	16.84
	TSA	63.8	63.8	63.8	62.8	62.7	62.7	61.8	61.8	61.7	61.0	60.9	60.8	59.9	59.8	59.7	58.9	58.8	58.7	58.3	58.3	58.2
	DE	384	394	405	563	578	593	736	755	775	898	922	946	1109	1140	1170	1307	1342	1378	1404	1442	1481
60-50	HC	3.33	3.44	3.55	4.85	5.01	5.18	6.31	6.53	6.75	7.68	7.95	8.22	9.45	9.78	10.12	11.09	11.49	11.89	11.90	12.33	12.75
	TSA	53.6	53.6	53.6	52.6	52.6	52.6	51.8	51.7	51.7	51.0	51.0	50.9	50.1	50.0	49.9	49.3	49.2	49.1	48.8	48.8	48.7
	DE	291	301	311	424	438	453	552	571	591	672	696	719	827	856	886	971	1006	1040	1042	1079	1116
55-40	HC	2.34	2.46	2.58	3.39	3.57	3.74	4.39	4.61	4.83	5.29	5.56	5.83	6.44	6.77	7.11	7.50	7.89	8.28	8.01	8.43	8.85
	TSA	43.9	44.0	44.1	43.1	43.2	43.3	42.4	42.4	42.4	41.7	41.7	41.6	40.8	40.8	40.7	40.1	40.1	40.0	39.7	39.7	39.6
	DE	136	143	150	197	208	218	256	269	282	308	324	339	375	394	414	437	459	482	467	491	515
50-40	HC	2.25	2.36	2.48	3.26	3.43	3.59	4.22	4.44	4.65	5.11	5.37	5.64	6.25	6.57	6.90	7.30	7.69	8.07	7.82	8.23	8.65
	TSA	43.1	43.1	43.1	42.3	42.3	42.3	41.6	41.6	41.5	41.0	40.9	40.9	40.2	40.2	40.1	39.6	39.5	39.4	39.3	39.2	39.1
	DE	196	206	216	284	299	313	368	387	406	445	468	491	545	573	602	637	670	704	682	718	754

Size 3

Water temp. (°C) entering/ leaving		Size 3.0, 3.1						Size 3.2									Size 3.3					
		Air flow l/s (m³/h)																				
		83 (300)			125 (450)			167 (600)			208 (750)			264 (950)			319 (1150)			347 (1250)		
		Dry bulb temperature at coil inlet (°C)																				
		21	20	19	21	20	19	21	20	19	21	20	19	21	20	19	21	20	19	21	20	19
70-60	HC	4.77	4.89	5.01	7.10	7.27	7.45	9.31	9.54	9.77	11.45	11.74	12.02	14.25	14.61	14.97	16.9	17.3	17.8	18.23	18.69	19.15
	TSA	67.8	67.8	67.7	67.1	67.1	67.0	66.4	66.4	66.3	65.8	65.7	65.7	65.0	64.9	64.8	64.2	64.1	64.0	63.8	63.7	63.6
	DE	420	430	440	624	639	655	818	838	859	1007	1032	1057	1253	1284	1316	1488	1525	1563	1603	1644	1684
60-50	HC	3.74	3.86	3.97	5.55	5.72	5.90	7.26	7.49	7.71	8.91	9.19	9.47	11.06	11.41	11.76	13.1	13.5	13.9	14.11	14.56	15.01
	TSA	57.7	57.7	57.7	57.1	57.0	57.0	56.4	56.4	56.4	55.9	55.8	55.8	55.1	55.1	55.0	54.5	54.4	54.3	54.1	54.1	54.0
	DE	327	338	348	486	501	516	635	655	675	780	804	829	968	998	1029	1147	1183	1220	1234	1274	1313
55-40	HC	3.02	3.14	3.26	4.44	4.62	4.80	5.77	6.00	6.23	7.03	7.32	7.60	8.66	9.02	9.37	10.2	10.6	11.0	10.94	11.40	11.85
	TSA	50.6	50.6	50.7	49.8	49.9	49.9	49.2	49.2	49.2	48.5	48.5	48.5	47.7	47.7	47.7	47.0	47.0	47.0	46.7	46.7	46.6
	DE	176	183	190	258	269	279	336	349	363	409	426	443	504	525	546	594	618	643	637	664	690
50-40	HC	2.69	2.80	2.92	3.97	4.14	4.32	5.17	5.40	5.62	6.33	6.60	6.88	7.82	8.17	8.51	9.2	9.6	10.1	9.93	10.37	10.82
	TSA	47.4	47.4	47.4	46.8	46.8	46.8	46.3	46.3	46.2	45.8	45.7	45.7	45.1	45.1	45.1	44.6	44.5	44.5	44.3	44.3	44.2
	DE	234	244	255	346	361	376	451	470	490	551	576	600	682	712	742	805	841	877	866	905	943

Legend:
HC - Heating capacity (kW)
TSA - Supply air temperature (°C)
DE - Water flow rate (l/h)

NOTE: To convert l/h to l/s, divide by 3600.

NOTE: Carrier advises that the supply air temperature be kept below 35°C in order to avoid the risk of stratification.

If the Atmosphera unit size 2 or 3 has only two spigots, the above performance data is reduced by 3%.

WARNING: The supply air temperature must not exceed 60°C otherwise damage may occur to the supply air spigot connections.

9.2 - Heating capacity - water coil, cont.

9.2.2 - Four-row coil, 1-row heating

Size 1

Water temp. (°C) entering/ leaving		Size 1.0																				
		Air flow l/s (m³/h)																				
		56 (200)			83 (300)			111 (400)			139 (500)			167 (600)			180 (650)			194 (700)		
		Dry bulb temperature at coil inlet (°C)																				
		21	20	19	21	20	19	21	20	19	21	20	19	21	20	19	21	20	19	21	20	19
70-60	HC	1.32	1.35	1.39	1.81	1.85	1.90	2.25	2.31	2.37	2.66	2.72	2.79	3.03	3.10	3.18	3.19	3.27	3.35	3.36	3.45	3.53
	TSA	40.2	39.7	39.1	38.7	38.1	37.5	37.5	36.9	36.2	36.6	35.9	35.2	35.8	35.1	34.4	35.5	34.8	34.1	35.1	34.4	33.7
	DE	116	119	122	159	163	167	198	203	208	234	239	245	266	273	280	281	288	295	296	303	311
60-50	HC	1.01	1.05	1.08	1.39	1.43	1.48	1.73	1.78	1.84	2.04	2.10	2.17	2.32	2.40	2.47	2.45	2.53	2.61	2.58	2.66	2.74
	TSA	35.8	35.2	34.6	34.6	34.0	33.4	33.7	33.0	32.4	32.9	32.3	31.6	32.3	31.7	31.0	32.1	31.4	30.7	31.8	31.1	30.5
	DE	89	91	94	121	125	129	151	156	161	178	184	190	203	210	216	214	221	228	226	233	240
55-40	HC	0.76	0.79	0.83	1.04	1.09	1.13	1.30	1.35	1.41	1.53	1.60	1.66	1.74	1.82	1.89	1.84	1.92	2.00	1.94	2.02	2.10
	TSA	32.1	31.5	31.0	31.2	30.6	30.0	30.5	29.9	29.3	30.0	29.3	28.7	29.5	28.9	28.2	29.3	28.7	28.0	29.1	28.5	27.8
	DE	44	46	48	61	63	66	76	79	82	89	93	97	102	106	110	107	112	116	113	118	122
50-40	HC	0.70	0.74	0.77	0.96	1.01	1.05	1.20	1.26	1.31	1.41	1.48	1.55	1.61	1.69	1.76	1.70	1.78	1.86	1.79	1.87	1.95
	TSA	31.3	30.7	30.1	30.4	29.8	29.2	29.8	29.2	28.6	29.3	28.7	28.0	28.9	28.2	27.5	28.7	28.0	27.3	28.5	27.8	27.2
	DE	61	64	67	84	88	92	105	109	114	123	129	135	141	147	153	148	155	162	156	163	170

Size 2

Water temp. (°C) entering/ leaving		Size 2.0, 2.1						Size 2.2									Size 2.3					
		Air flow l/s (m³/h)																				
		83 (300)			125 (450)			167 (600)			208 (750)			264 (950)			319 (1150)			347 (1250)		
		Dry bulb temperature at coil inlet (°C)																				
		21	20	19	21	20	19	21	20	19	21	20	19	21	20	19	21	20	19	21	20	19
70-60	HC	1,87	1.92	1.97	2.55	2.62	2.68	3.15	3.23	3.32	3.69	3.78	3.87	4.34	4.45	4.56	4.92	5.04	5.17	5.19	5.33	5.46
	TSA	39.4	38.8	38.2	37.7	37.0	36.4	36.4	35.7	35.0	35.4	34.7	34.0	34.4	33.7	32.9	33.6	32.8	32.1	33.2	32.5	31.7
	DE	165	169	173	224	230	236	277	284	292	324	332	340	381	391	401	432	443	454	457	468	480
60-50	HC	1.43	1.48	1.53	1.95	2.01	2.08	2.41	2.49	2.57	2.81	2.91	3.00	3.31	3.42	3.53	3.75	3.88	4.00	3.96	4.09	4.22
	TSA	35.1	34.5	33.9	33.7	33.1	32.5	32.8	32.1	31.4	32.0	31.3	30.6	31.2	30.5	29.8	30.6	29.9	29.1	30.3	29.6	28.8
	DE	125	130	134	171	176	182	211	218	225	246	254	262	290	299	309	328	339	350	347	358	370
55-40	HC	1.06	1.11	1.16	1.45	1.51	1.58	1.79	1.87	1.95	2.09	2.18	2.27	2.45	2.56	2.67	2.77	2.90	3.02	3.93	3.06	3.19
	TSA	31.4	30.9	30.3	30.4	29.8	29.2	29.7	29.1	28.4	29.2	28.5	27.8	28.6	27.9	27.2	28.1	27.4	26.7	27.9	27.2	26.4
	DE	62	65	67	84	88	92	104	109	113	121	127	132	143	149	155	162	169	176	171	178	186
50-40	HC	0.99	1.04	1.08	1.35	1.41	1.47	1.66	1.74	1.82	1.94	2.03	2.12	2.28	2.39	2.50	2.58	2.70	2.83	2.73	2.86	2.98
	TSA	30.7	30.1	29.6	29.8	29.2	28.5	29.1	28.5	27.8	28.6	27.9	27.2	28.0	27.3	26.6	27.6	26.9	26.2	27.4	26.7	26.0
	DE	86	90	95	117	123	128	145	152	159	169	177	185	199	208	218	225	236	246	238	249	260

Size 3

Water temp. (°C) entering/ leaving		Size 3.0, 3.1						Size 3.2									Size 3.3					
		Air flow l/s (m³/h)																				
		83 (300)			125 (450)			167 (600)			208 (750)			264 (950)			319 (1150)			347 (1250)		
		Dry bulb temperature at coil inlet (°C)																				
		21	20	19	21	20	19	21	20	19	21	20	19	21	20	19	21	20	19	21	20	19
70-60	HC	1.81	1.85	1.90	2.56	2.63	2.69	3.23	3.31	3.40	3.85	3.95	4.05	4.63	4.75	4.86	5.33	5.47	5.60	5.68	5.82	5.96
	TSA	38.7	38.1	37.5	37.6	37.0	36.3	36.8	36.1	35.5	36.1	35.4	34.7	35.3	34.6	33.9	34.6	33.9	33.2	34.3	33.6	32.9
	DE	159	163	167	225	231	237	284	291	299	339	347	356	407	417	427	469	481	493	499	512	524
60-50	HC	1.39	1.44	1.49	1.98	2.04	2.11	2.50	2.58	2.66	2.97	3.07	3.17	3.57	3.69	3.80	4.12	4.25	4.38	4.38	4.52	4.66
	TSA	34.7	34.1	33.5	33.8	33.2	32.6	33.2	32.5	31.9	32.6	32.0	31.3	32.0	31.3	30.6	31.5	30.8	30.1	31.3	30.6	29.9
	DE	122	126	130	173	179	184	218	225	233	260	269	277	313	323	333	360	372	383	383	396	408
55-40	HC	1.08	1.12	1.17	1.53	1.59	1.65	1.93	2.01	2.09	2.29	2.39	2.48	2.75	2.87	2.98	3.17	3.30	3.43	3.37	3.51	3.65
	TSA	31.6	31.0	30.4	30.9	30.3	29.7	30.4	29.8	29.1	30.0	29.3	28.7	29.5	28.8	28.1	29.1	28.4	27.7	28.9	28.2	27.5
	DE	63	65	68	89	93	96	112	117	121	134	139	145	160	167	174	185	192	200	196	205	213
50-40	HC	0.98	1.03	1.07	1.39	1.45	1.52	1.76	1.84	1.91	2.09	2.19	2.28	2.51	2.63	2.74	2.89	3.02	3.15	3.08	3.22	3.36
	TSA	30.6	30.0	29.4	30.0	29.4	28.8	29.6	28.9	28.3	29.2	28.5	27.9	28.8	28.1	27.4	28.4	27.7	27.0	28.2	27.5	26.8
	DE	86	90	93	121	127	132	153	160	167	182	191	199	219	229	239	252	264	275	268	280	293

Legend:
HC - Heating capacity (kW)
TSA - Supply air temperature (°C)
DE - Water flow rate (l/h)

NOTE: To convert l/h to l/s, divide by 3600.

NOTE: To avoid the risk of stratification and the resulting discomfort, Carrier advises to keep the discharge temperature below 35°C.

If the Atmosphera unit size 2 or 3 has only two spigots, the above performance data is reduced by 3%.

WARNING: The supply air temperature must not exceed 60°C otherwise damage may occur to the supply air spigot connections.

9.3 - Water coil pressure drops

9.3.1 - Size 1

NOTE: To convert l/h to l/s, divide by 3600.

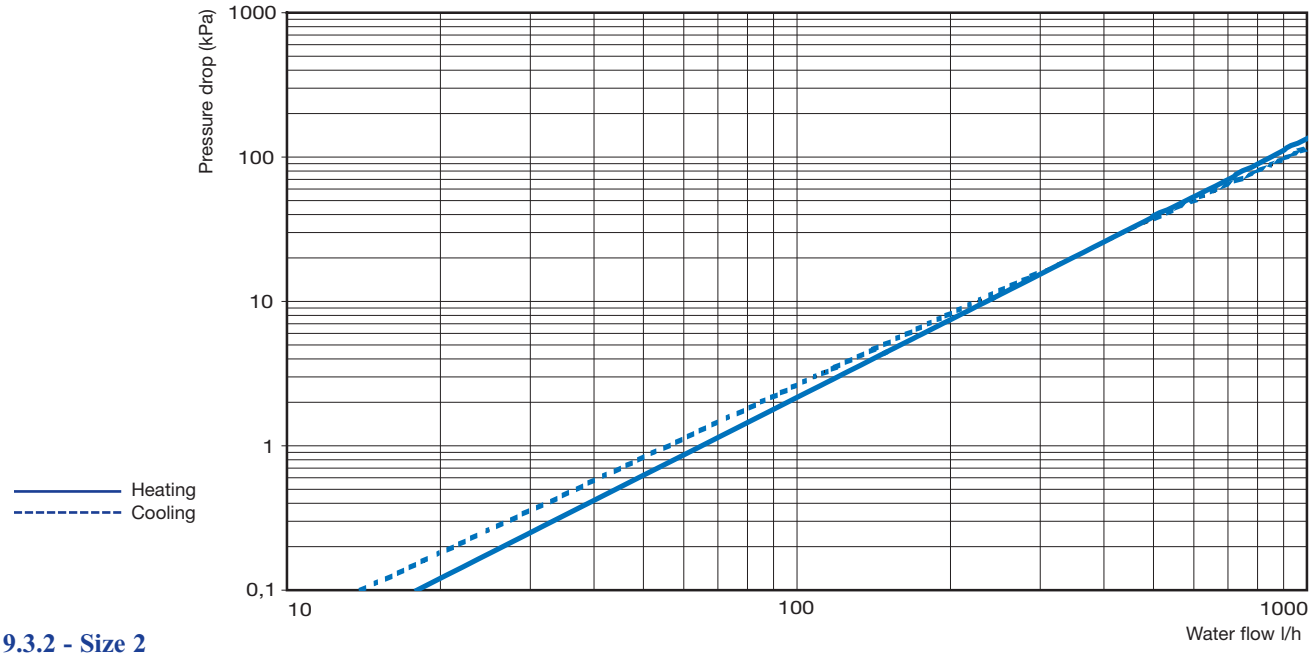

9.3.2 - Size 2

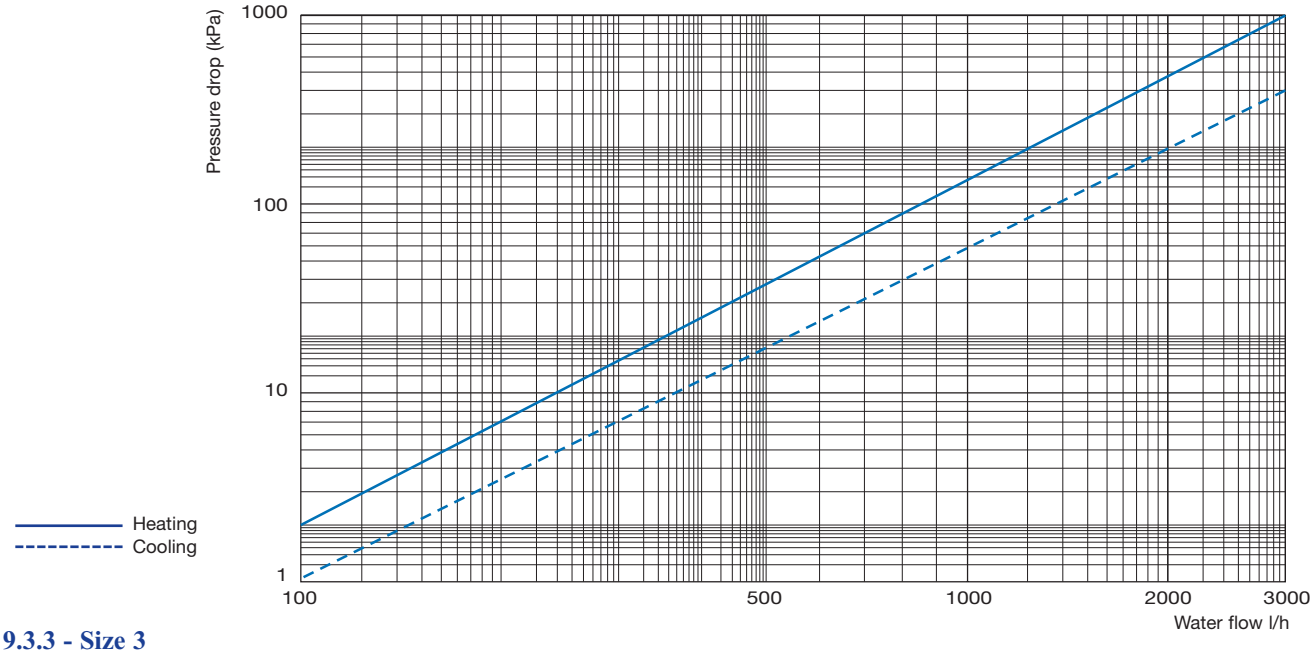

9.3.3 - Size 3

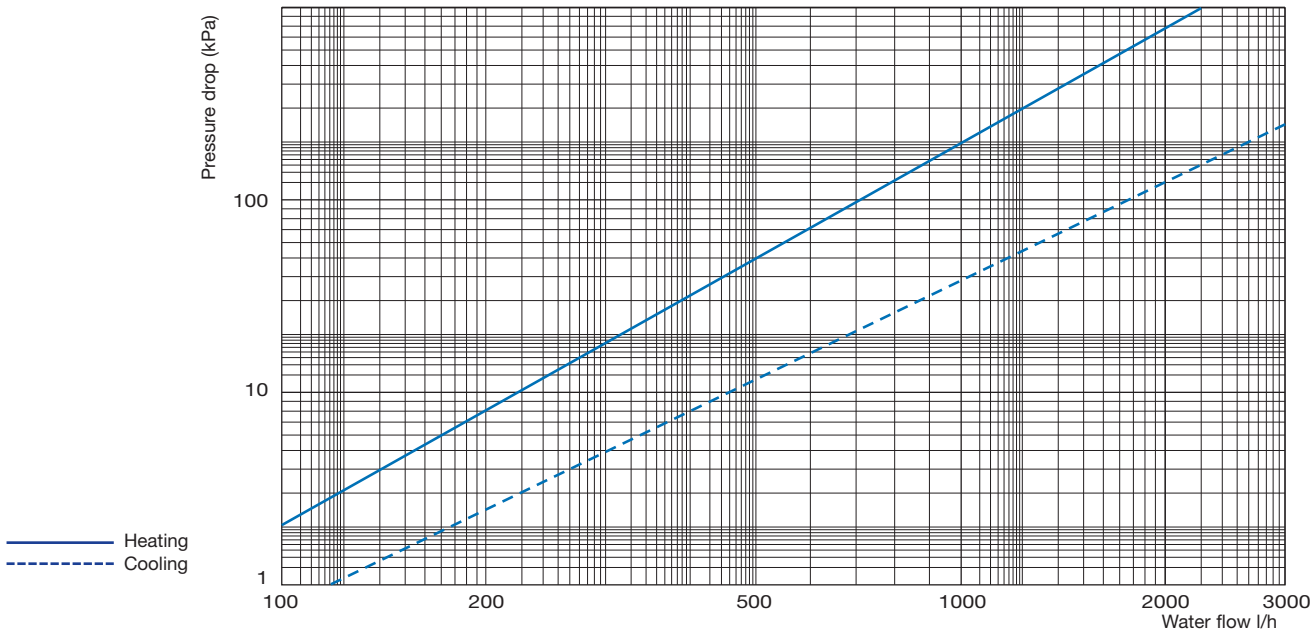

9.4 - Water valve pressure drops

9.4.1 - 2-way 1/2” water valve pressure drop

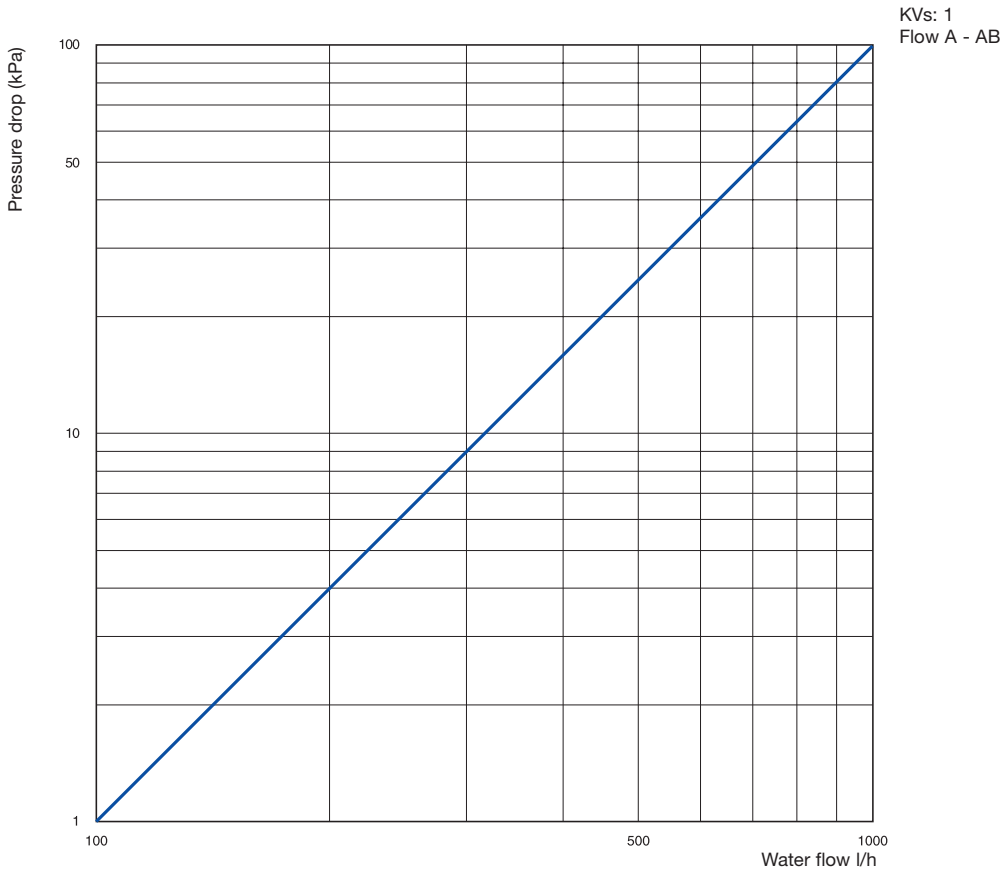

9.4.2 - 3-way 1/2” water valve pressure drop (valve with integral bypass)

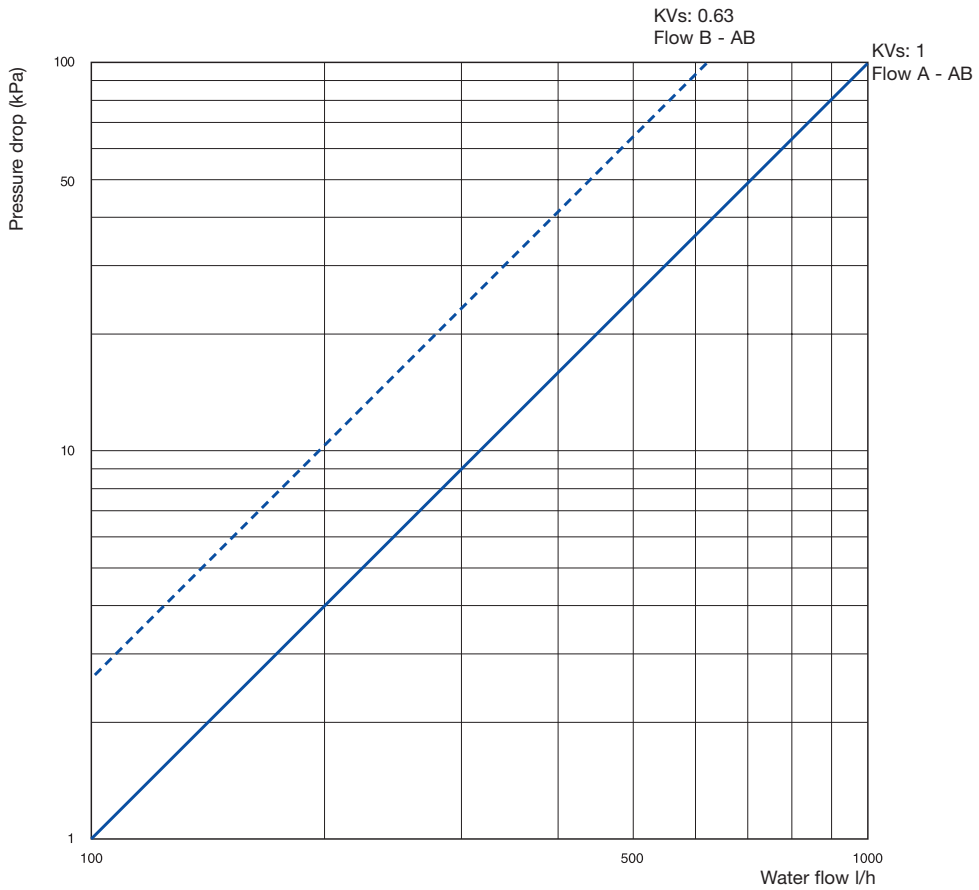

NOTE: To convert l/h to l/s, divide by 3600.

9.5 - Sound power levels

9.5.1 - Standard insulation

42EM 1.0 - with two discharge spigots

		Octave band frequency (Hz)							
V	**Type**	**125**	**250**	**500**	**1 K**	**2 K**	**4K**	**8K**	**dBA**
V1	SUP	57.3	55.1	46.2	43.1	37.1	31.3	26.5	50.3
	REP	60	57.8	52	46.8	43.5	38.7	33.4	54.3
	RAD	57.6	50.3	45.2	37.6	32.2	24.7	26.1	47.3
V2	SUP	54.8	51.4	42.7	39.4	33.4	26.1	23.3	46.8
	REP	57.8	54.1	49	43.3	39.9	34	28.6	51
	RAD	54.1	46.8	41.7	34.2	28.4	19.9	22.4	43.8
V3	SUP	51.5	48.8	40.1	36.5	30.4	22.2	22.2	44
	REP	55	51.5	46.4	40.8	36.8	29.8	23.4	48.3
	RAD	53.2	44.1	37	31	25.6	16.8	20.9	41.1
V4	SUP	48.4	45.2	36.9	33	26.4	18	21.8	40.6
	REP	51.9	47.7	43.2	37.1	32.5	23.9	20.6	44.7
	RAD	49.9	40.7	33.8	27.4	21.7	14.2	20.3	37.8
V5	SUP	45.4	42.5	34.1	29.7	22.4	15.8	21.6	37.7
	REP	48.9	44.6	40.6	33.7	28	19.2	19.9	41.7
	RAD	46.2	37.8	30.9	24.2	17.7	13.2	20.1	34.6
V6	SUP	43.1	40.1	32.1	26.9	19	15	21.6	35.4
	REP	46.7	42.6	38.6	30.9	24.5	16.9	19.8	39.5
	RAD	43.8	35.9	29.1	21.5	15	12.9	20.1	32.6

42EM 2.0 and 3.0 - with 2 discharge spigots

		Octave band frequency (Hz)							
V	**Type**	**125**	**250**	**500**	**1 K**	**2 K**	**4K**	**8K**	**dBA**
V1	SUP	57.4	54.3	49.1	40.3	31.8	28.1	22.6	50.3
	RET	62.7	60.4	55.9	48.4	44.8	38.6	31.2	57
	RAD	54.8	48.5	41.4	34.3	29.3	19.5	21.2	44.4
V2	SUP	54.3	51.1	45.7	36.6	27.7	22.8	19.9	46.8
	RET	58.7	56.5	52.8	44.6	40.5	33.2	25.2	53.4
	RAD	51.1	45	38.2	30	25.3	14.9	18.6	40.9
V3	SUP	49.5	45.4	40.3	30.3	20.2	14.4	19.0	41.3
	RET	53.7	50.9	47.3	38.1	32.9	24.5	19.4	47.6
	RAD	47.6	39.3	33.1	23.8	18.2	11.3	18.2	35.9
V4	SUP	44	39.6	34.2	22.9	12	9.9	18.9	35.3
	RET	50	46.3	42.7	32.5	26.2	18	18.6	42.9
	RAD	44.5	33.7	27.5	16.6	11.1	10.3	18.1	31.5
V5	SUP	40.3	37.3	27.7	17.5	7	9.4	18.9	31.5
	RET	43.5	42.2	37.6	27	19.3	14.6	18.6	38
	RAD	42	30.9	23.4	12.4	8.2	10.7	18.8	28.8
V6	SUP	39.8	34.4	28.1	15.4	6.1	8	18.5	30.1
	RET	43.3	39.2	34.4	22.5	15.8	13.9	17	35.2
	RAD	39.4	28.8	21.1	10.6	7.8	10.3	18.1	26.8

42EM 2.1 and 3.1 - with 2 discharge spigots

		Octave band frequency (Hz)							
V	**Type**	**125**	**250**	**500**	**1 K**	**2 K**	**4K**	**8K**	**dBA**
V1	SUP	56	51.0	44	38	30	23	21	46.7
	RET	58.5	53	48.5	42	36.5	30	26	50.1
	RAD	51	43	37	29	25	15	20	39.8
V2	SUP	53.4	47.4	41.1	33.3	25	19	20	43.4
	RET	55	50	46	39	32	27	24	47.1
	RAD	48	40	34	25.5	20	13	19	36.7
V3	SUP	49.5	44.2	37.9	30	19.7	15	19.8	40
	RET	51.9	46.6	42.5	34.8	27.7	23.1	22.4	43.6
	RAD	45	36.0	30.6	21.7	16.2	11.3	18.8	33.3
V4	SUP	45.5	41	34.3	25	15	14	19.8	36.4
	RET	48.3	43.5	39	30	26	21.5	22	40.2
	RAD	41.8	33.6	27.1	17	13.2	11	18.6	30.3
V5	SUP	42.5	38	31.3	21.9	11.8	11.7	19	33.4
	RET	45.3	40.5	36	26.8	22.9	19.1	20	37.2
	RAD	38.8	30.6	24.1	14	10.2	10	18.3	27.6
V6	SUP								
	RET			Speed not available for 230 V					
	RAD								

42EM 2.2 and 3.2 - with three discharge spigots

		Octave band frequency (Hz)							
V	**Type**	**125**	**250**	**500**	**1 K**	**2 K**	**4K**	**8K**	**dBA**
V1	SUP	62.4	57.6	50.2	44.8	36.3	31.9	26	53.2
	RET	64.4	59.9	54.2	48.8	43.8	38.3	33.5	56.5
	RAD	55.2	49.3	42.6	36.3	32.2	23.1	23.5	45.5
V2	SUP	61.7	55.8	48.6	42.9	34.4	29.5	24.2	51.7
	RET	62.8	58	52.7	47	41.8	35.8	30.8	54.8
	RAD	53.9	47.6	41.2	34.5	30.3	20.4	21.8	43.9
V3	SUP	58.6	52.7	46	39.8	30.9	25.1	21.4	48.7
	RET	60	55.3	50.2	44.2	38.5	32	27.2	52
	RAD	52.2	44.5	38.7	31.5	27.1	16.7	20	41.4
V4	SUP	54.9	48.9	42.6	35.8	26.2	19.7	20.3	45
	RET	56.8	51.5	47.1	40.4	34	27.6	24.5	48.5
	RAD	49.2	41	35.4	27.5	22.4	13.1	19.1	38
V5	SUP	49.5	44.2	37.9	30	19.7	15	19.8	40
	RET	51.9	46.6	42.5	34.8	27.7	23.1	22.4	43.6
	RAD	45	36	30.6	21.7	16.2	11.3	18.8	33.3
V6	SUP	43.5	39	32.3	22.9	12.8	12.7	19.5	34.4
	RET	46.3	41.5	37	27.8	23.9	20.1	20.9	38.2
	RAD	39.8	31.6	25.1	14.9	11.2	10.8	18.6	28.5

42EM 2.3 and 3.3 - with four discharge spigots

		Octave band frequency (Hz)							
V	**Type**	**125**	**250**	**500**	**1 K**	**2 K**	**4K**	**8K**	**dBA**
V1	SUP	66.2	63	54.9	50.4	41.6	38.2	33.1	58.2
	RET	67	63.8	57.4	52.6	48.2	43.4	39.2	60.1
	RAD	57.9	53.6	45.5	40.3	35.3	28.1	29.2	49.1
V2	SUP	66	61.8	54.1	49.5	40.8	37.1	31.8	57.3
	RET	66.6	63	56.6	51.8	47.3	42.3	37.9	59.3
	RAD	57.1	52.6	44.6	39.4	34.4	26.9	27.8	48.1
V3	SUP	64.5	60.3	52.8	48	39.3	35.2	29.6	55.9
	RET	65.4	61.3	55.4	50.5	45.9	40.5	35.8	57.9
	RAD	55.9	50.9	43.4	38	33	24.9	25.8	46.7
V4	SUP	62.6	57.6	50.6	45.4	36.6	31.8	26.2	53.5
	RET	64.1	58.9	53.6	48.4	43.6	37.6	32.9	55.9
	RAD	54.2	48.4	41.3	35.5	30.4	21.4	22.9	44.4
V5	SUP	58.3	52.8	46.2	40.3	31.3	25	21.4	48.8
	RET	59.4	53.9	49.3	43.4	37.9	31	26.8	51.1
	RAD	49.9	43.6	37.3	30.7	25.9	16	19.6	4
V6	SUP	51.7	47.1	40.6	33.6	23.3	16.6	19.7	42.8
	RET	54	47.9	43.8	36.8	30	23.9	23	45.1
	RAD	44.3	38.1	31.8	24.1	18.1	11.5	18.6	34.3

Legend:
V - Fan speed
SUP - Supply (dB re = 10^{-12} W)
RET - Return (dB re = 10^{-12} W)
RAD - Radiated (dB re = 10^{-12} W)

NOTE: The measurements are based on ISO standards and are without supply and return octopus plenums.

The room sound level calculations must take account of the sound absorption of the duct, the plenum, the room and ceiling.

For a selected speed the sound level can vary within a tolerance of ± 2 dB(A), depending on the available static pressure.

9.5.2 - Insulation class '0' in accordance with BS476, part 6 and 7

42EM 1.0 - with two discharge spigots

		Octave band frequency (Hz)							
V	**Type**	**125**	**250**	**500**	**1 K**	**2 K**	**4K**	**8K**	**dBA**
V1	SUP	56.8	54.1	46.2	43.3	39.5	33	26.1	50
	RET	59.5	56.9	51.6	46.6	42.9	39.5	33.9	53.4
	RAD	56.2	49	44.5	38.5	34	27	26.1	46.4
V2	SUP	54.3	50.4	42.7	39.6	35.8	27.8	22.9	46.5
	RET	57.3	53.2	48.6	43.1	39.3	34.8	29.1	50.1
	RAD	52.7	45.5	41	35.1	30.2	22.2	22.4	42.8
V3	SUP	51	47.8	40.1	36.7	32.8	23.9	21.8	43.8
	RET	54.5	50.6	46	40.6	36.2	30.6	23.9	47.4
	RAD	51.8	42.8	36.3	31.9	27.4	19.1	20.9	40.1
V4	SUP	47.9	44.2	36.9	33.2	28.8	19.7	21.4	40.3
	RET	51.4	46.8	42.8	36.9	31.9	24.7	21.1	43.8
	RAD	48.5	39.4	33.1	28.3	23.5	16.5	20.3	36.8
V5	SUP	44.9	41.5	34.1	29.9	24.8	17.5	21.2	37.3
	RET	48.4	43.7	40.2	33.5	27.4	20	20.4	40.7
	RAD	44.8	36.5	30.2	25.1	19.5	15.5	20.1	33.6
V6	SUP	42.6	39.1	32.1	27.1	21.4	16.7	21.2	35
	RET	46.2	41.7	38.2	30.7	23.9	17.7	20.3	38.4
	RAD	42.4	34.6	28.4	22.4	16.8	15.2	20.1	31.5

42EM 2.0 and 3.0 - with two discharge spigots

		Octave band frequency (Hz)							
V	**Type**	**125**	**250**	**500**	**1 K**	**2 K**	**4K**	**8K**	**dBA**
V1	SUP	56.9	53.3	49.1	40.5	34.2	29.8	22.2	49.8
	RET	62.2	59.5	55.5	48.2	44.2	39.4	31.7	56.5
	RAD	53.4	47.2	40.7	35.2	31.1	21.8	21.2	43.7
V2	SUP	53.8	50.1	45.7	36.8	30.1	24.5	19.5	46.5
	RET	58.2	55.6	52.4	44.4	39.9	34	25.7	52.9
	RAD	49.7	43.7	37.5	30.9	27.1	17.2	18.6	40.1
V3	SUP	49	44.4	40.3	30.5	22.6	16.1	18.6	40.9
	RET	53.2	50	46.9	37.9	32.3	25.3	19.9	47.1
	RAD	46.2	38.0	32.4	24.7	20.0	13.6	18.2	35.1
V4	SUP	43.5	38.6	34.2	23.1	14.4	11.6	18.5	34.9
	RET	49.5	45.4	42.3	32.3	25.6	18.8	19.1	42.4
	RAD	43.1	32.4	26.8	17.5	12.9	12.6	18.1	30.5
V5	SUP	39.8	36.3	27.7	17.7	9.4	9.7	18.1	30.9
	RET	43	41.3	37.2	26.8	18.7	14.7	17.5	37.4
	RAD	40.6	29.6	22.7	13.3	9.6	12.6	18.1	27.8
V6	SUP	39.3	33.4	28.1	15.6	8.5	11.1	18.5	29.7
	RET	42.8	38.3	34	22.3	15.2	15.4	19.1	34.7
	RAD	38	27.5	20.4	11.5	10	13	18.8	26

42EM 2.1 and 3.1 - with two discharge spigots

		Octave band frequency (Hz)							
V	**Type**	**125**	**250**	**500**	**1 K**	**2 K**	**4K**	**8K**	**dBA**
V1	SUP	55.5	50	44	38.2	32.4	24.7	20.6	46.4
	RET	58	52.1	48.1	41.8	35.9	30.8	26.5	49.6
	RAD	49.6	41.7	36.3	29.9	26.8	17.3	20	39.1
V2	SUP	52.9	46.4	41.1	33.5	27.4	20.7	19.6	43
	RET	54.5	49.1	45.6	38.8	31.4	27.8	24.5	46.6
	RAD	46.6	38.7	33.3	26.4	21.8	15.3	19	35.9
V3	SUP	49	43.2	37.9	30.2	22.1	16.7	19.4	39.6
	RET	51.4	45.7	42.1	34.6	27.1	23.9	22.9	43.1
	RAD	43.6	34.7	29.9	22.6	18	13.6	18.8	32.5
V4	SUP	45	40	34.3	25.2	17.4	15.7	19.4	36
	RET	47.8	42.6	38.6	29.8	25.4	22.3	22.5	39.6
	RAD	40.4	32.3	26.4	17.9	15	13.3	18.6	29.5
V5	SUP	42	37	31.3	22.1	14.2	13.4	18.6	33
	RET	44.8	39.6	35.6	26.6	22.3	19.9	20.5	36.7
	RAD	37.4	29.3	23.4	14.9	12	12.3	18.3	26.8
V6	SUP								
	RET			Speed not available for 230 V					
	RAD								

42EM 2.2 and 3.2 - with three discharge spigots

		Octave band frequency (Hz)							
V	**Type**	**125**	**250**	**500**	**1 K**	**2 K**	**4K**	**8K**	**dBA**
V1	SUP	61.9	56.6	50.2	45	38.7	33.6	25.6	52.9
	RET	63.9	59	53.8	48.6	43.2	39.1	34	56
	RAD	53.8	48	41.9	37.2	34	25.4	23.5	44.9
V2	SUP	61.2	54.8	48.6	43.1	36.8	31.2	23.8	51.4
	RET	62.3	57.1	52.3	46.8	41.2	36.6	31.3	54.2
	RAD	52.5	46.3	40.5	35.4	32.1	22.7	21.8	43.3
V3	SUP	58.1	51.7	46	40	33.3	26.8	21	48.4
	RET	59.5	54.4	49.8	44	37.9	32.8	27.7	51.5
	RAD	50.8	43.2	38	32.4	28.9	19	20	40.7
V4	SUP	54.4	47.9	42.6	36	28.6	21.4	19.9	44.6
	RET	56.3	50.6	46.7	40.2	33.4	28.4	25	48
	RAD	47.8	39.7	34.7	28.4	24.2	15.4	19.1	37.3
V5	SUP	49	43.2	37.9	30.2	22.1	16.7	19.4	39.6
	RET	51.4	45.7	42.1	34.6	27.1	23.9	22.9	43.1
	RAD	43.6	34.7	29.9	22.6	18	13.6	18.8	32.5
V6	SUP	43	38	32.3	23.1	15.2	14.4	19.1	34
	RET	45.8	40.6	36.6	27.6	23.3	20.9	21.4	37.7
	RAD	38.4	30.3	24.4	15.8	13	13.1	18.6	27.8

42EM 2.3 and 3.3 - with four discharge spigots

		Octave band frequency (Hz)							
V	**Type**	**125**	**250**	**500**	**1 K**	**2 K**	**4K**	**8K**	**dBA**
V1	SUP	65.7	62	54.9	50.6	44	39.9	32.7	57.9
	RET	66.5	62.9	57	52.4	47.6	44.2	39.7	59.6
	RAD	56.5	52.3	44.8	41.2	37.1	30.4	29.2	48.5
V2	SUP	65.5	60.8	54.1	49.7	43.2	38.8	31.4	57.1
	RET	66.1	62.1	56.2	51.6	46.7	43.1	38.4	58.8
	RAD	55.7	51.3	43.9	40.3	36.2	29.2	27.8	47.6
V3	SUP	64	59.3	52.8	48.2	41.7	36.9	29.2	55.6
	RET	64.9	60.4	55	50.3	45.3	41.3	36.3	57.4
	RAD	54.5	49.6	42.7	38.9	34.8	27.2	25.8	46.1
V4	SUP	62.1	56.6	50.6	45.6	39	33.5	25.8	53.2
	RET	63.6	58	53.2	48.2	43	38.4	33.4	55.4
	RAD	52.8	47.1	40.6	36.4	32.2	23.7	22.9	43.8
V5	SUP	57.8	51.8	46.2	40.5	33.7	26.7	21	48.5
	RET	58.9	53	48.9	43.2	37.3	31.8	27.3	50.6
	RAD	48.5	42.3	36.6	31.6	27.7	18.3	19.6	39.4
V6	SUP	51.2	46.1	40.6	33.8	25.7	18.3	19.3	42.4
	RET	53.5	47	43.4	36.6	29.4	24.7	23.5	44.6
	RAD	42.9	36.8	31.1	25	19.9	13.8	18.6	33.6

Legend:
V - Fan speed
SUP - Supply (dB re = 10^{-12} W)
RET - Return (dB re = 10^{-12} W)
RAD - Radiated (dB re = 10^{-12} W)

NOTE: The measurements are based on ISO standards and are without supply and return octopus plenums.

The room sound level calculations must take account of the sound absorption of the duct, the plenum, the room and ceiling.

For a selected speed the sound level can vary within a tolerance of ± 2 dB(A), depending on the available static pressure.

9.5.3 - Return air plenum attenuation

The sound power level measurements were carried out on a non-ducted unit without return air plenum. If the unit includes a return air plenum, correct the sound power levels (RET) using the correction factors in the table below:

Unit size	Octave band frequency (Hz)							
	125	250	500	1K	2K	4K	8K	dBA
42EM 1.0	-0.8	-1.7	-3.7	-10.6	-13.4	-9.6	-7.6	-3.4
42EM 2.1, 3.1	-1	-3	-6	-9	-13	-9.4	-6	-4.8
42EM 2.2, 3.2	-1.1	-2.7	-5.4	-9	-13.2	-8.8	-6.1	-4
42EM 2.3, 3.3	-0.4	-1.1	-2.6	-7.4	-10.7	-6.8	-4.1	-2.5

9.5.4 - Sound damper attenuation

As a standard option a sound damper can be added in the return air of a non-ducted return air version.

This will dampen the sound on the return air side and maintain accessibility to the filter from the rear of the unit.

This sound damper is designed to minimise air pressure loss.

	Octave band frequency (Hz)							
	125	250	500	1K	2K	4K	8K	dBA
Attenuation	-0.3	-1.7	-3.8	-5.8	-10.6	-16.9	-8.5	-3

9.6 - Electrical data

9.6.1 - Size 1.0

Vn	I (A)	P (W)	Qv (m^3/h)	Qv (l/s)	Press. (Pa)
V1	0.52	119	705	196	0
	0.52	118	675	188	10
	0.51	117	650	181	20
	0.50	115	596	166	39
	0.50	114	560	156	50
	0.48	111	410	114	92
	0.48	110	321	89	114
	0.47	108	227	63	135
	0.46	107	141	39	149
V2	0.37	87	594	165	0
	0.37	85	525	146	28
	0.36	82	460	128	50
	0.35	81	400	111	69
	0.34	78	335	93	89
	0.34	78	294	82	102
	0.34	77	222	62	122
	0.33	76	180	50	130
	0.33	75	149	41	135
V3	0.31	73	522	145	0
	0.31	72	473	131	22
	0.30	69	393	109	51
	0.29	68	332	92	72
	0.29	67	278	77	91
	0.28	65	217	60	110
	0.28	64	179	50	118

Vn	I (A)	P (W)	Qv (m^3/h)	Qv (l/s)	Press. (Pa)
V4	0.26	60	437	121	0
	0.25	59	385	107	23
	0.25	58	315	88	53
	0.24	57	246	68	80
	0.24	55	187	52	100
	0.23	54	147	41	110
V5	0.21	51	370	103	1
	0.21	51	312	87	25
	0.21	49	255	71	48
	0.20	48	179	50	80
	0.20	47	150	42	90
V6	0.19	45	330	92	0
	0.18	44	274	76	20
	0.18	43	196	54	52
	0.18	43	150	42	70
	0.18	42	120	33	80
	0.17	41	87	24	90
	0.17	41	63	18	99

9.6.2 - Size 2.0 and 3.0

Vn	I (A)	P (W)	Qv (m^3/h)	Qv (l/s)	Press. (Pa)
V1	0.51	107	895	249	11
	0.50	106	846	235	20
	0.48	100	733	204	40
	0.47	97	650	181	53
	0.45	91	484	134	73
	0.44	88	362	101	82
	0.43	84	235	65	90
	-	-	-	-	-
	-	-	-	-	-
V2	0.36	79	674	187	15
	0.35	75	630	175	26
	0.33	72	593	165	35
	0.31	67	509	141	53
	0.30	64	438	122	63
	0.28	61	335	93	74
	0.26	56	232	64	83
	0.25	55	200	56	86
	-	-	-	-	-
V3	0.32	69	516	143	2
	0.30	66	485	135	13
	0.30	64	461	128	22
	0.29	61	434	121	32
	0.27	57	370	103	51
	0.25	54	313	87	62
	0.23	51	364	73	71
	0.22	46	167	46	84

Vn	I (A)	P (W)	Qv (m^3/h)	Qv (l/s)	Press. (Pa)
V4	0.27	58	420	117	2
	0.27	57	395	110	11
	0.26	56	367	102	21
	0.25	54	335	93	30
	0.24	53	307	85	40
	0.23	50	273	76	50
	0.22	48	238	66	70
	0.21	44	196	54	81
	0.19	42	148	41	90
V5	0.24	51	349	97	1.6
	0.23	50	315	88	11
	0.23	49	283	79	21
	0.22	48	258	72	31
	0.21	46	232	64	41
	0.20	45	209	58	51
	0.19	43	178	49	61
	0.18	39	140	39	71
	0.17	38	112	31	75
V6	0.21	45	294	82	0
	0.20	44	245	68	12
	0.20	43	210	58	21
	0.19	42	182	51	31
	0.19	40	160	44	41
	0.18	39	137	38	51
	0.17	37	115	32	61
	0.17	36	88	24	68

Legend:

I Current drawn by the fan motor
P Power input to the fan motor
Vn Fan motor speed
Qv Air flow rate
Press. Available static pressure

NOTE: Voltage supply: 230 V ± 15%

9.6 - Electrical data, cont.

9.6.3 - Size 2.1 and 3.1

Vn	I (A)	P (W)	Vn (rpm)	Qv (m^3/h)	Qv (l/s)	Press. (Pa)
V1	0.6	128	852	834	232	0
	0.57	122	930	765	213	20
	0.52	111	1074	654	182	50
	0.49	104	1144	581	161	65
	0.46	99	1197	499	139	80
	0.45	95	1232	437	121	91
	0.43	91	1262	373	104	100
	0.4	85	1305	290	81	110
V2	0.52	111	755	720	200	0
	0.5	108	868	652	181	21
	0.46	99	1040	547	152	50
	0.43	94	1102	483	134	65
	0.41	89	1158	413	115	79
	0.39	85	1200	353	98	90
	0.37	79	1242	286	79	100
	0.35	74	1275	211	59	110
V3	0.42	92	658	583	162	0
	0.41	89	783	503	140	21
	0.37	82	967	398	111	50
	0.36	78	1050	341	95	65
	0.34	74	1133	283	79	80
	0.33	72	1180	248	69	90
	0.31	68	1218	173	48	100

Vn	I (A)	P (W)	Vn (rpm)	Qv (m^3/h)	Qv (l/s)	Press. (Pa)
V4	0.35	77	559	477	133	0
	0.34	74	706	390	108	20
	0.31	69	915	275	76	50
	0.3	66	1012	228	63	65
	0.28	62	1095	143	40	80
	0.28	62	1118	87	24	90
V5	0.27	59	466	347	96	0
	0.26	57	643	241	67	20
	0.25	56	710	192	53	30
	0.25	54	805	160	44	40
	0.24	53	865	97	27	50
	0.24	53	914	20	6	62
V6						

9.6.4 - Size 2.2 and 3.2

Vn	I (A)	P (W)	Vn (rpm)	Qv (m^3/h)	Qv (l/s)	Press. (Pa)
V1	0.82	182	1100	1203	334	0
	0.75	168	1162	1114	309	15
	0.7	155	1228	1020	283	35
	0.67	150	1253	920	256	53
	0.63	139	1297	807	224	70
	0.6	132	1326	707	196	85
	0.57	126	1345	549	153	106
	0.56	121	1360	524	146	110
V2	0.7	158	1019	1070	297	0
	0.66	149	1097	976	271	20
	0.61	138	1184	837	232	50
	0.58	131	1222	754	209	65
	0.54	121	1270	661	184	80
	0.52	115	1296	590	164	90
	0.5	112	1320	514	143	101
	0.49	107	1337	440	122	110
V3	0.62	140	917	926	257	0
	0.59	132	1010	849	236	20
	0.53	120	1123	723	201	51
	0.5	113	1181	649	180	66
	0.47	105	1236	559	155	81
	0.45	101	1262	493	137	91
	0.43	95	1288	423	117	100
	0.4	91	1315	340	94	110

Vn	I (A)	P (W)	Vn (rpm)	Qv (m^3/h)	Qv (l/s)	Press. (Pa)
V4	0.51	114	795	760	211	0
	0.49	110	900	693	193	20
	0.44	100	1062	568	158	51
	0.42	96	1111	513	143	64
	0.4	90	1174	437	121	80
	0.38	87	1216	376	104	90
	0.35	81	1256	304	84	101
	0.33	76	1294	239	66	111
V5	0.39	89	650	574	159	0
	0.38	86	778	499	139	20
	0.35	79	965	386	107	51
	0.33	75	1040	331	92	65
	0.32	73	1092	293	81	74
	0.3	68	1168	240	67	85
	0.29	65	1205	189	53	95
V6	0.3	68	534	417	116	0
	0.29	66	684	333	92	20
	0.27	62	884	241	67	44
	0.26	59	995	193	54	55
	0.25	58	1032	128	36	69

Legend:

I Current drawn by the fan motor
P Power input to the fan motor
Vn Fan motor speed
Qv Air flow rate
Press. Available static pressure

NOTE: To convert rpm to r/s, divide by 60

NOTE: Voltage supply: 230 V ± 15%

9.6.5 - Size 2.3 and 3.3

Vn	I (A)	P (W)	Vn (rpm)	Qv (m^3/h)	Qv (l/s)	Press. (Pa)
V1	1.01	225	1307	1494	415	1
	0.94	209	1342	1266	352	31
	0.91	201	1359	1141	317	50
	0.89	193	1365	1074	298	60
	0.86	189	1381	920	256	80
	0.83	182	1393	812	225	90
	0.81	176	1406	701	195	100
	0.80	172	1413	610	169	111
V2	0.89	203	1267	1414	393	0
	0.85	194	1294	1290	358	20
	0.80	179	1332	1104	307	51
	0.77	174	1344	1007	280	65
	0.74	165	1363	880	244	81
	0.71	158	1379	774	215	90
	0.68	152	1394	666	185	101
	0.67	148	1401	578	161	110
V3	0.80	184	1181	1314	365	0
	0.76	173	1232	1199	333	22
	0.70	159	1286	1033	287	51
	0.67	153	1307	932	259	65
	0.63	143	1339	797	221	81
	0.60	135	1361	695	193	91
	0.58	133	1370	625	174	100
	0.56	127	1384	522	145	111

Legend:

I Current drawn by the fan motor
P Power input to the fan motor
Vn Fan motor speed
Qv Air flow rate
Press. Available static pressure

NOTE: To convert rpm to r/s, divide by 60

Vn	I (A)	P (W)	Vn (rpm)	Qv (m^3/h)	Qv (l/s)	Press. (Pa)
V4	0.71	162	1065	1138	316	0
	0.66	151	1147	1043	290	21
	0.60	139	1216	901	250	50
	0.58	133	1253	817	227	65
	0.53	122	1304	700	194	80
	0.51	117	1325	621	172	90
	0.50	113	1342	536	149	100
	0.47	107	1360	426	118	110
V5	0.58	132	874	878	244	0
	0.55	125	981	811	225	20
	0.50	116	1105	714	198	50
	0.47	108	1188	639	178	65
	0.44	101	1242	550	153	81
	0.42	98	1263	492	137	91
	0.40	94	1289	422	117	100
	0.38	88	1322	335	93	110
V6	0.45	102	703	631	175	1
	0.43	98	836	566	157	21
	0.40	91	1025	482	134	51
	0.38	87	1095	426	118	65
	0.36	83	1157	362	101	80
	0.34	79	1204	317	88	90
	0.32	73	1259	253	70	100
	0.30	70	1288	186	52	110

NOTE: Voltage supply: 230 V ± 15%

9.7 - Air flow data

9.7.1 - Static pressure available (Pa) against air flow (m^3/h)

Atmosphera size 1.0 (unit without spigot)

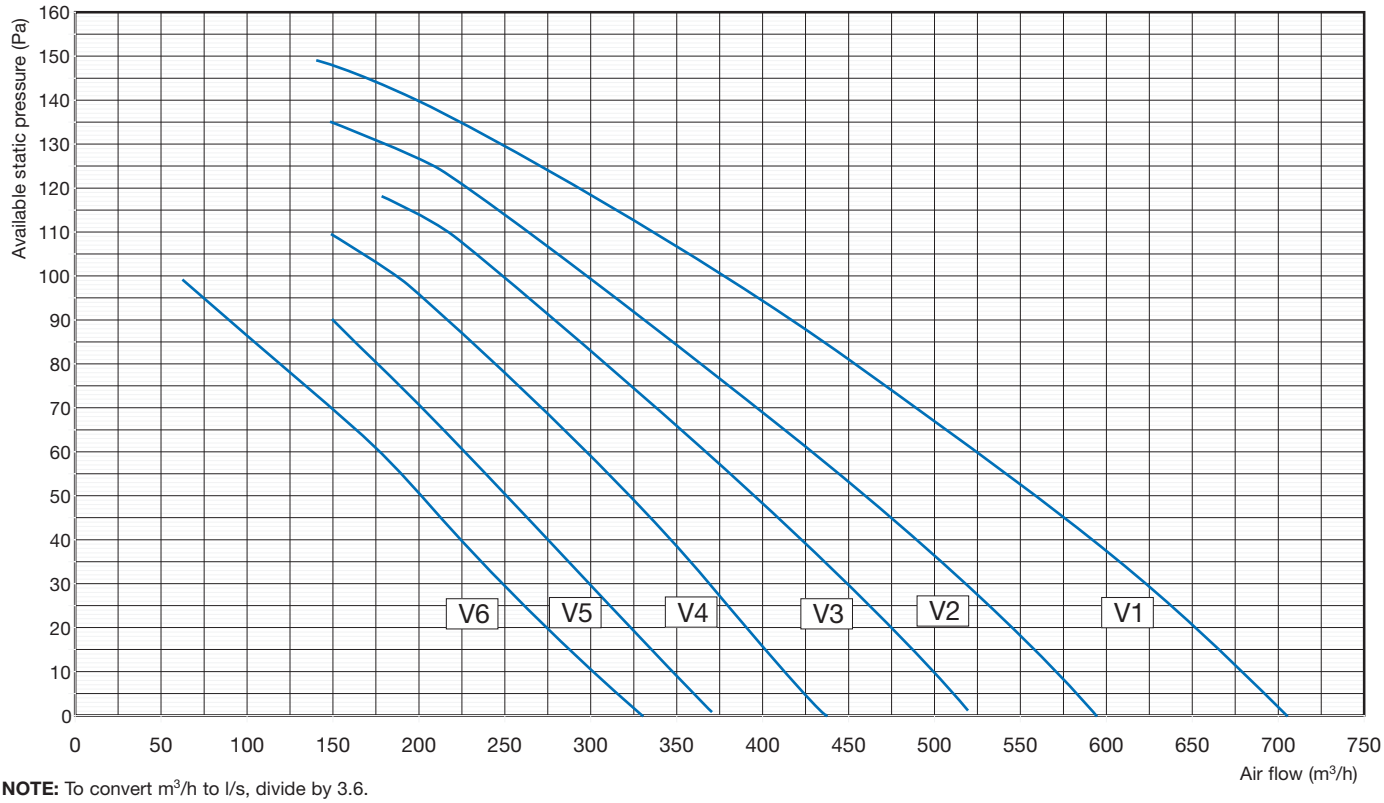

NOTE: To convert m^3/h to l/s, divide by 3.6.

IMPORTANT: The curves were derived by smoothing, based on the information shown in the electrical data table.

NOTE: The data is for units without supply and return plenums. See chapter 9.7.1.1 for the plenum pressure drops.

9.7.1.1 - Air pressure drops (Pa) for octopus plenum boxes as a function of the number of spigots (200 mm Ø)

Size 1

Air flow (m^3/h)		**100**	**200**	**300**	**400**	**450**	**500**	**550**	**600**	**650**	**700**
Air flow (l/s)		**28**	**56**	**83**	**111**	**125**	**139**	**153**	**167**	**181**	**194**
1 spigot	SUP	1	4	9	15	19	24	-	-	-	-
	RET	2	7	15	27	35	43	-	-	-	-
2 spigots	SUP	0	1	2	3	4	5	6	8	9	10
	RET	0	2	4	6	8	10	12	16	18	20
3 spigots	SUP	0	0-	1	1	2	2	3	3	4	4
	RET	0	1	2	3	4	5	6	7	8	10

Legend:
SUP supply
RET return

9.7.2 - Static pressure available (Pa) against air flow (m^3/h)

Atmosphera size 2.0 and 3.0 (unit without spigot)

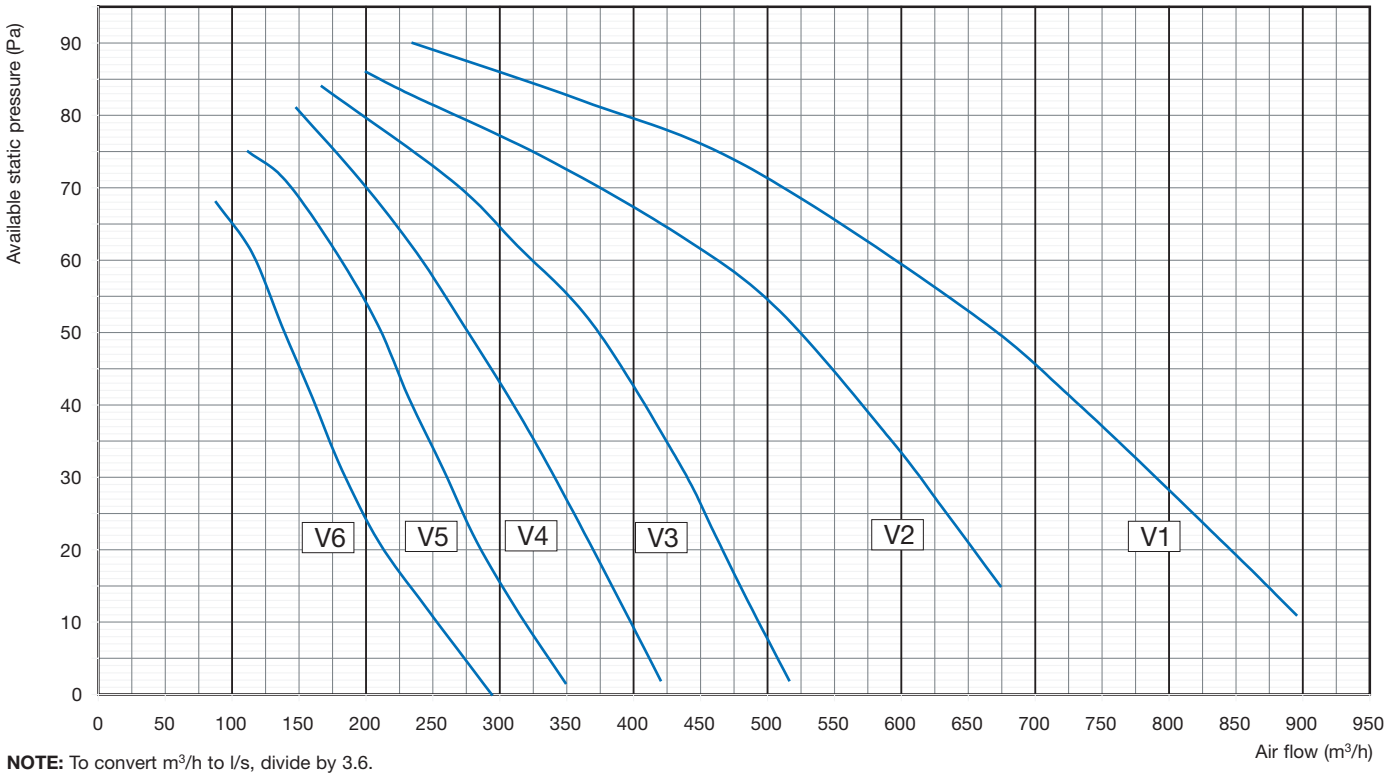

NOTE: To convert m^3/h to l/s, divide by 3.6.

Atmosphera size 2.1 and 3.1 (unit without spigot)

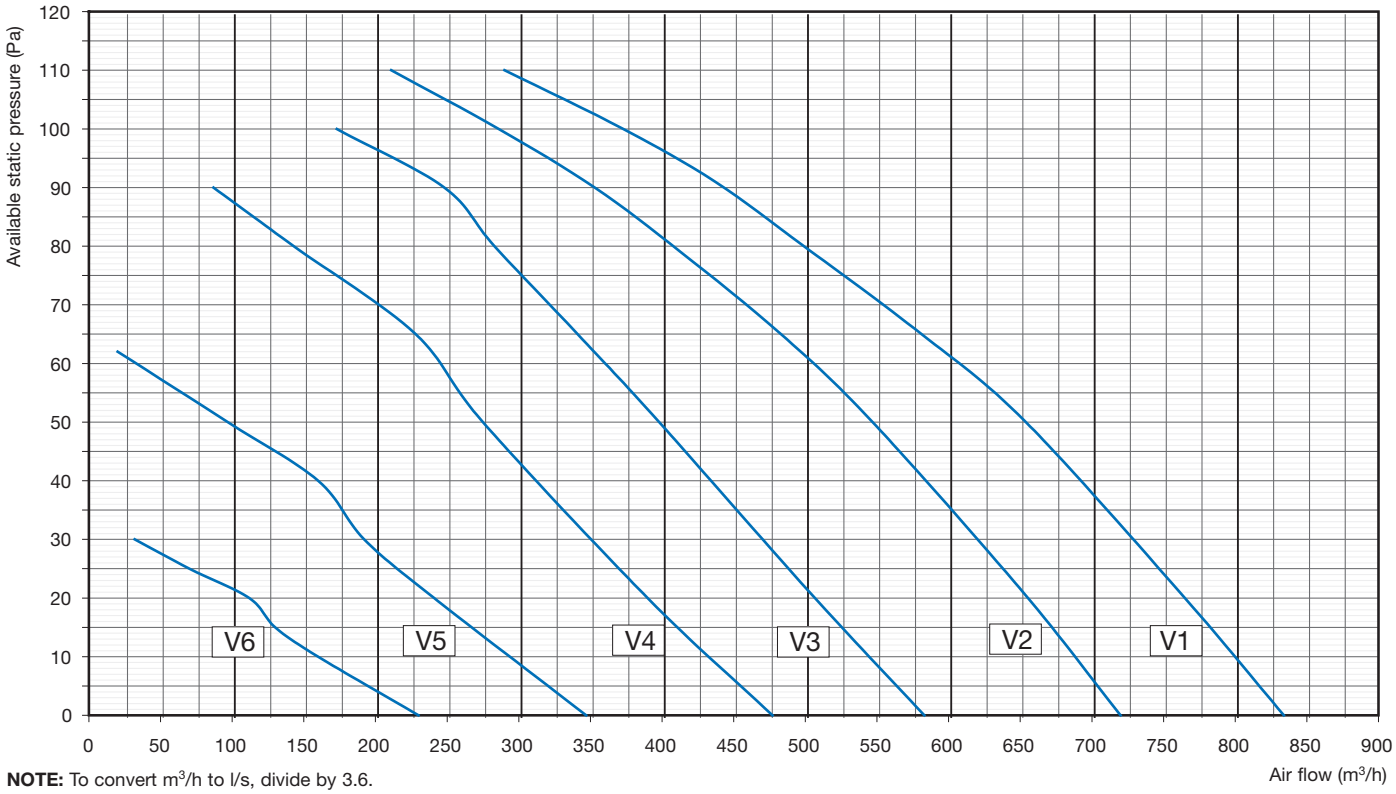

NOTE: To convert m^3/h to l/s, divide by 3.6.

IMPORTANT: The curves were derived by smoothing, based on the information shown in the electrical data table.

NOTE: The data is for units without supply and return plenums. See chapter 9.7.1.1 for the plenum pressure drops.

9.7 - Air flow data, cont.

9.7.2 - Static pressure available (Pa) against air flow (m^3/h)

Atmosphera size 2.2 and 3.2 (unit without spigot)

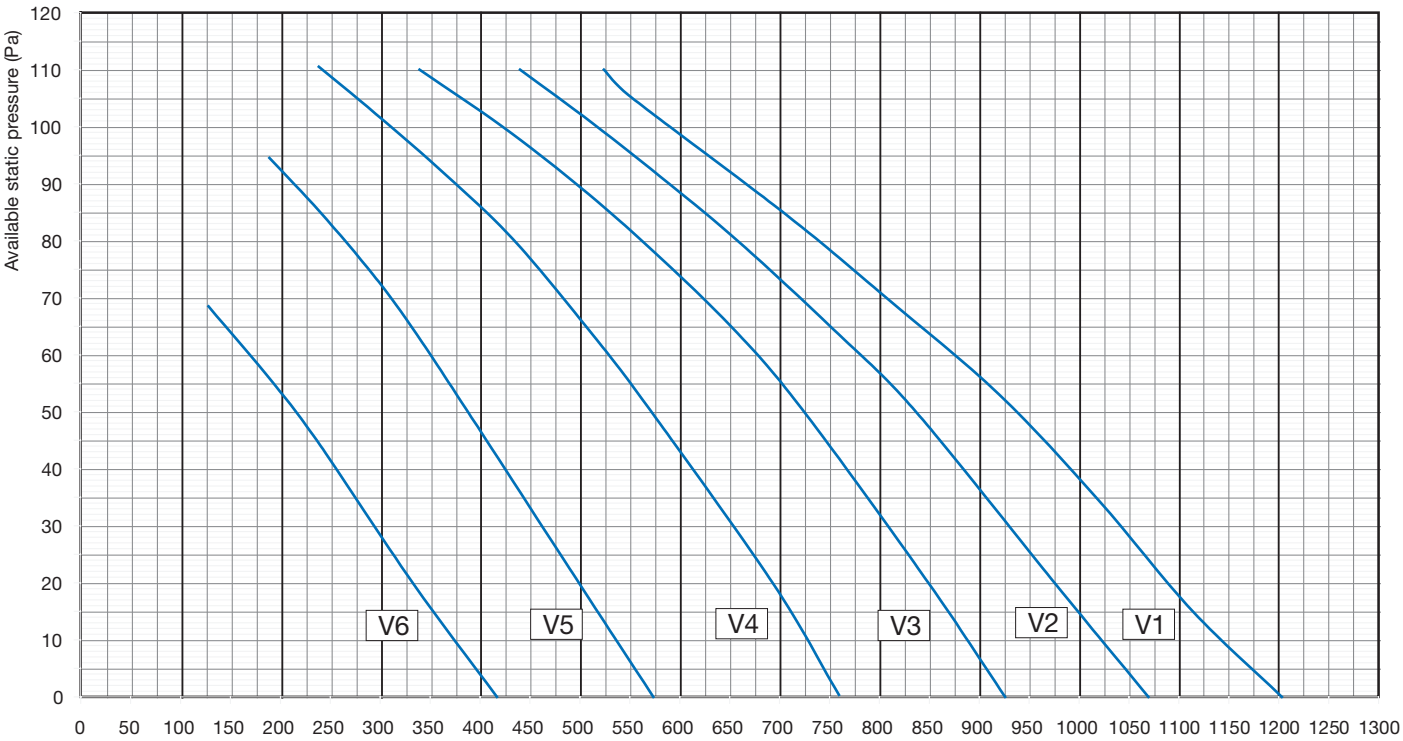

NOTE: To convert m^3/h to l/s, divide by 3.6.

Atmosphera size 2.3 and 3.3 (unit without spigot)

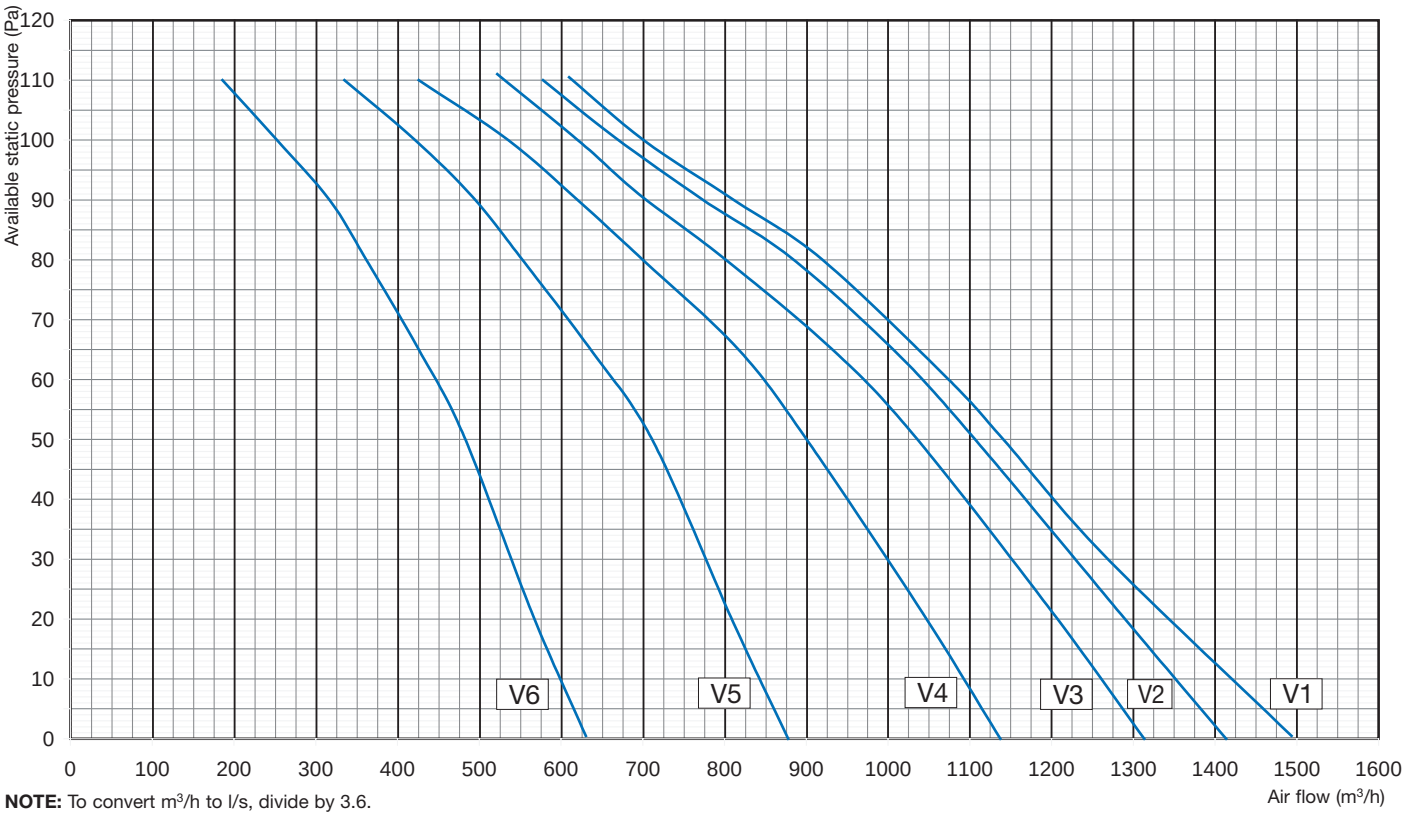

NOTE: To convert m^3/h to l/s, divide by 3.6.

IMPORTANT: The curves were derived by smoothing, based on the information shown in the electrical data table.

NOTE: The data is for units without supply and return plenums. See chapter 9.7.2.1 for the plenum pressure drops.

9.7.2.1 - Air pressure drops (Pa) for octopus plenum boxes as a function of the number of spigots (200 mm Ø)

Sizes 2.1, 2.2, 2.3, 3.1, 3.2 and 3.3

Air flow (m^3/h)		**0**	**100**	**200**	**300**	**400**	**500**	**600**	**700**	**800**	**900**	**1000**	**1100**	**1200**	**1300**	**1400**	**1500**
Air flow (l/s)		**0**	**28**	**56**	**83**	**111**	**139**	**167**	**194**	**222**	**250**	**278**	**305**	**333**	**361**	**389**	**417**
2 spigots	SUP	0	0.9	3.5	7.9	14.0	21.8	31.4									
	RET	0	0.7	2.7	8.1	10.9	17.1	24.6									
3 spigots	SUP	0	0.2	0.7	1.6	2.9	4.5	6.5	6.9	116	14.7	18.1	21.9				
	RET	0	0.2	0.7	1.7	3.0	4.6	6.7	9.1	11.9	15.0	18.6	22.5				
4 spigots	SUP	0	0	0.2	0.4	0.7	1.1	1.6	2.1	2.8	3.5	4.3	5.2	5.2	7.3	8.5	9.7
	RET	0	0.1	0.3	0.8	1.4	2.1	3.0	4.1	5.4	6.8	8.5	10.2	12.2	14.3	16.6	19.0
5 spigots	SUP	0	0	0.1	0.3	0.5	07	1.0	1.4	1.8	2.3	2.9	3.5	4.1	4.9	5.6	6.5
	RET	0	0	0.2	0.4	0.7	1.1	1.6	2.1	2.8	3.5	4.3	5.3	6.3	7.3	8.5	9.8

Legend:
SUP supply
RET return

9.7.3 - Pressure drops (Pa) for return air sound dampers

Air flow (m^3/h)	**100**	**300**	**500**	**700**	**900**	**1000**	**1100**	**1200**	**1300**
Air flow (l/s)	**28**	**83**	**139**	**194**	**250**	**278**	**305**	**333**	**361**
Sound damper T1	0	1	3	7	11	-	-	-	-
Sound damper T2 and T3	0	0.5	1	2	3	3.5	4	5	6

10 - CODIFICATION

Character	1	2	3	4	5	6	7	8	9	10	11	12	13	14	15	16
Example	4	2	E	M	1	0	A	B	D	A	B	2	2	Q	A	

Unit type
Unit size
Air flow range (fan motor assembly size)
Chassis and insulation type
Type of control
Type: water coil and drain pan
Type of fresh air controller
No. of return air spigots
No. of supply air spigots
Fan motor speed wiring
Modification index
Specials

Character	Codification	Description
1,2,3,4	**42EM**	**Unit type**
5		**Unit size**
	1	42EM Size 1
	2	42EM Size 2
	3	42EM Size 3
6		**Air flow range**
	0	560 m^3/h (156 l/s) for size 1 660 m^3/h (183 l/s) for sizes 2 and 3
	1	655 m^3/h (182 l/s) for sizes 2 and 3
	2	980 m^3/h (272 l/s) for sizes 2 and 3
	3	1170 m^3/h (325 l/s) for sizes 2 and 3
7		**Chassis and insulation type**
	A	Modular model with standard insulation.
	B	Modular model with insulation class 0 in accordance with BS 476, part 6 and 7 and metal spigots.
	C	Compact model with standard insulation.
	D	Compact model with insulation class 0 in accordance with BS 476, part 6 and 7 and metal spigots.

Character	Codification	Description
8,9		**Control**
		Without terminal strip and cover
	GA	Unit without control valves for 2-pipe or 4-pipe configuration with fan cable ready for connection (unit supplied without terminal strip and without protective cover).
	GB	Unit without control valves 2-pipe 2-wire configuration with fan and electric heater cables ready for connection (unit supplied without terminal strip and without protective cover).
		Terminal strip and plastic cover
	GC	Unit without control valves for 2-pipe or 4-pipe configuration with fan cables wired to a terminal block and protected by a cover.
	GD	Unit without control valves for 2-pipe 2-wire configuration with fan and heater cables wired to a terminal block and protected by a cover.

Character	Codification	Description
8,9		**Control (continued)**
		Terminal strip and plastic cover
	AD	Unit with 1 on/off type two-way control valve, cables wired to a terminal block and protected by a cover.
	AE	Unit with 2 on/off type two-way control valves, cables wired to a terminal block and protected by a cover.
	AF	Unit with 1 on/off type two-way control valve, electric heater relay, cables wired to a terminal block and protected by a cover.
	AG	Unit with 1 on/off type two-way control valve with flexible water pipes, cables wired to a terminal block and protected by a cover.
	AH	Unit with 2 on/off type two-way control valves with flexible water pipes, cables wired to a terminal block and protected by a cover.
	AJ	Unit with 1 on/off type two-way control valve with flexible water pipe connectors, electric heater relay, cables wired to a terminal block and protected by a cover.
	AK	Unit with 1 on/off type three-way control valve, cables wired to a terminal block and protected by a cover.
	AL	Unit with 2 on/off type three-way control valves, cables wired to a terminal block and protected by a cover.
	AM	Unit with 1 on/off type three-way control valve, electric heater relay cables wired to a terminal block and protected by a cover.
	AN	Unit with 1 on/off type three-way control valve with flexible water pipes, cables wired to a terminal block and protected by a cover.
	AP	Unit with 2 on/off type three-way control valves with flexible water pipes, cables wired to a terminal block and protected by a cover.
	AQ	Unit with 1 on/off type three-way control valves with flexible water pipes, electric heater relay, cables wired to a terminal block and protected by a cover.
	AR	Unit with 1 on/off type three-way control valve, changeover switch, cables wired to a terminal block and protected by a cover.
	AS	Unit with 1 on/off type three-way control valves with flexible water pipes, changeover switch, cables wired to a terminal block and protected by a cover.

Character	Codification	Description
8,9		**Control (continued)**
		Terminal strip and plastic cover
	AT	Unit with 1 on/off type two-way control valve, fan and electric heater cables wired to a terminal block and protected by a cover (without electric heater relay).
	AU	Unit with 1 on/off type two-way control valve with flexible water pipe connectors, fan and electric heater cables wired to a terminal block and protected by a cover (without electric heater relay).
	AV	Unit with 1 on/off type three-way control valve with fan and electric heater cables wired to a terminal block and protected by a cover (without electric heater relay).
	AW	Unit with 1 on/off type three-way control valve with flexible water pipes with, fan and electric heater cables wired to a terminal block and protected by a cover (without electric heater relay).
	FA	Unit with 1 on/off type three-way control valve, changeover switch fan and electric heater cables wired to a terminal block and protected by a cover (with electric heater relay).
	FB	Unit with 1 on/off type three-way control valve with flexible water pipes, changeover switch, fan and electric heater cables wired to a terminal block and protected by a cover (with electric heater relay).
	FC	Unit with 1 on/off type three-way controls valve, changeover switch, fan and electric heater cables wired to a terminal block and protected by a cover (without electric heater relay).
	FD	Unit with 1 on/off type three-way control valve with flexible water pipes, changeover switch, fan and electric heater cables wired to a terminal block and protected by a cover (without electric heater relay).

Character	Codification	Description
8,9		**Control (continued)**
		Terminal strip and metal cover
	HC	Unit without control valves for 2-pipe or 4-pipe configuration with fan cables wired to a terminal block and protected by a metal cover.
	HD	Unit without control valves for 2-pipe 2-wire configuration with fan and heater cables wired to a terminal block and protected by a metal cover.
	QD	Unit with 1 on/off type two-way control valve, cables wired to a terminal block and protected by a metal cover.
	QE	Unit with 2 on/off type two-way control valves, cables wired to a terminal block and protected by a metal cover.
	QF	Unit with 1 on/off type two-way control valve, electric heater relay, cables wired to a terminal block and protected by a metal cover.
	QG	Unit with 1 on/off type two-way control valve with flexible water pipes, cables wired to a terminal block and protected by a metal cover.
	QH	Unit with 2 on/off type two-way control valves with flexible water pipes, cables wired to a terminal block and protected by a metal cover.
	QJ	Unit with 1 on/off type two-way control valve with flexible water pipe connectors, electric heater relay, cables wired to a terminal block and protected by a metal cover.
	QK	Unit with 1 on/off type three-way control valve, cables wired to a terminal block and protected by a metal cover.
	QL	Unit with 2 on/off type three-way control valves, cables wired to a terminal block and protected by a metal cover.
	QM	Unit with 1 on/off type three-way control valve, electric heater relay cables wired to a terminal block and protected by a metal cover.

Character	Codification	Description
8,9		**Control (continued)**
		Terminal strip and metal cover
	QN	Unit with 1 on/off type three-way control valve with flexible water pipes, cables wired to a terminal block and protected by a metal cover.
	QP	Unit with 2 on/off type three-way control valves with flexible water pipes, cables wired to a terminal block and protected by a metal cover.
	QQ	Unit with 1 on/off type three-way control valves with flexible water pipes, electric heater relay, cables wired to a terminal block and protected by a metal cover.
	QR	Unit with 1 on/off type three-way control valve, changeover switch, cables wired to a terminal block and protected by a metal cover.
	QS	Unit with 1 on/off type three-way control valves with flexible water pipes, changeover switch, cables wired to a terminal block and protected by a metal cover.
	QT	Unit with 1 on/off type two-way control valve, fan and electric heater cables wired to a terminal block and protected by a metal cover (without electric heater relay).
	QU	Unit with 1 on/off type two-way control valve with flexible water pipe connectors, fan and electric heater cables wired to a terminal block and protected by a metal cover (without electric heater relay).
	QV	Unit with 1 on/off type three-way control valve with fan and electric heater cables wired to a terminal block and protected by a metal cover (without electric heater relay).
	QW	Unit with 1 on/off type three-way control valve with flexible water pipes with, fan and electric heater cables wired to a terminal block and protected by a metal cover (without electric heater relay).

Character	Codification	Description
8,9		**Control (continued)**
		Terminal strip and metal cover
	NA	Unit with 1 on/off type three-way control valve, changeover switch fan and electric heater cables wired to a terminal block and protected by a metal cover (with electric heater relay).
	NB	Unit with 1 on/off type three-way control valve with flexible water pipes, changeover switch, fan and electric heater cables wired to a terminal block and protected by a metal cover (with electric heater relay).
	NC	Unit with 1 on/off type three-way controls valve, changeover switch, fan and electric heater cables wired to a terminal block and protected by a metal cover (without electric heater relay).
	ND	Unit with 1 on/off type three-way control valve with flexible water pipes, changeover switch, fan and electric heater cables wired to a terminal block and protected by a metal cover (without electric heater relay).
		Manual speed selector
	PA	Unit with manual speed selector and 1 on/off type two-way control valve.
	PB	Unit with manual speed selector and 2 on/off type two-way control valves.
	PC	Unit with Maestro controller, 1 on/off type two-way control valve and electric heater control.
	PD	Unit with manual speed selector and 1 on/off type two-way control valve with flexible water pipes.
	PE	Unit with manual speed selector and 2 on/off type two-way control valves with flexible water pipes.
	PF	Unit with manual speed selector, 1 on/off type two-way control valve with flexible water pipes and electric heater control.

Character	Codification	Description
8,9		**Control (continued)**
		Manual speed selector
	RA	Unit with manual speed selector and 1 on/off type three-way control valve.
	RB	Unit with manual speed selector and 2 on/off type three-way control valves.
	RC	Unit with Maestro controller, 1 on/off type three-way control valve and electric heater control.
	RD	Unit with manual speed selector and 1 on/off type three-way control valve with flexible water pipes.
	RE	Unit with manual speed selector and 2 on/off type three-way control valves with flexible water pipes.
	RF	Unit with manual speed selector, 1 on/off type three-way control valve with flexible water pipes and electric heater control.
		Maestro control
	BA	Unit with Maestro controller and 1 on/off type two-way control valve.
	BB	Unit with Maestro controller and 2 on/off type two-way control valves.
	BC	Unit with Maestro controller, 1 on/off type two-way control valve and electric heater control.
	BD	Unit with Maestro controller and 1 on/off type two-way control valve with flexible water pipes.
	BE	Unit with Maestro controller and 2 on/off type two-way control valves with flexible water pipes.
	BF	Unit with Maestro controller, 1 on/off type two-way control valve with flexible water pipes and electric heater control.
	BG	Unit with Maestro controller, 1 on/off type two-way control valve and a return air sensor.
	BH	Unit with Maestro controller, 2 on/off type two-way control valves and a return air sensor.

Character	Codification	Description
8,9		**Control (continued)**
		Maestro control
	BJ	Unit with Maestro controller, 1 on/off type two-way control valve, a return air sensor and electric heater control.
	BK	Unit with Maestro controller, 1 on/off type two-way control valve with flexible water pipes and a return air sensor.
	BL	Unit with Maestro controller, 2 on/off type two-way control valves with flexible water pipes and a return air sensor.
	BM	Unit with Maestro controller, 1 on/off type two-way control valve with flexible water pipes, a return air sensor and electric heater control.
	CA	Unit with Maestro controller and 1 on/off type three-way control valve.
	CB	Unit with Maestro controller and 2 on/off type three-way control valves.
	CC	Unit with Maestro controller, 1 on/off type three-way control valve and electric heater control
	CD	Unit with Maestro controller and 1 on/off type three-way control valve with flexible water pipes.
	CE	Unit with Maestro controller and 2 on/off type three-way control valves with flexible water pipes.
	CF	Unit with Maestro controller, 1 on/off type three-way control valve with flexible water pipes and electric heater control.
	CG	Unit with Maestro controller, 1 on/off type three-way control valve and a return air sensor.
	CH	Unit with Maestro controller, 2 on/off type three-way control valves and a return air sensor.
	CJ	Unit with Maestro controller, 1 on/off type three-way control valve, a return air sensor and electric heater control.
	CK	Unit with Maestro controller, 1 on/off type three-way control valve with flexible water pipes and a return air sensor.
	CL	Unit with Maestro controller, 2 on/off type three-way control valves with flexible water pipes and a return air sensor.

Character	Codification	Description
8,9		**Control (continued)**
		Maestro control
	CM	Unit with Maestro controller, 1 on/off type three-way control valve with flexible water pipes, a return air sensor, and electric heater control.
	DA	Unit with Maestro controller, 1 on/off type three-way control valve and a changeover sensor.
	DB	Unit with Maestro controller, 1 on/off type three-way control valve with flexible water pipes and a changeover sensor.
	DC	Unit with Maestro controller, 1 on/off type three-way control valve, a changeover sensor and a return air sensor.
	DD	Unit with Maestro controller, 1 on/off type three-way control valve with flexible water pipes, a changeover sensor and a return air sensor.
	EA	Unit with Maestro controller, 1 on/off type three-way control valve, a changeover sensor and electric heater control.
	EB	Unit with Maestro controller, 1 on/off type three-way control valve with flexible water pipes, a changeover sensor and electric heater control.
	EC	Unit with Maestro controller, 1 on/off type three-way control valve, a changeover sensor, a return air sensor and electric heater control.
	ED	Unit with Maestro controller, 1 on/off type three-way control valve with flexible water pipes, a changeover sensor, a return air sensor and electric heater control.
		Aquasmart control
	TC	Unit with Aquasmart control, 2 on/off type 3-way valves, a water temp. sensor and a return air sensor.
	TD	Unit with Aquasmart control, 2 on/off type 3-way valves with flexible water pipes, a water temp. sensor and a return air sensor.
	VC	Unit with Aquasmart control, 1 on/off type 3-way valves, a water temp. sensor and a return air sensor.
	VD	Unit with Aquasmart control, 1 on/off type 3-way valves with flexible water pipes, a water temp. sensor and a return air sensor.

Character	Codification	Description
8,9		**Control (continued)**
		Aquasmart control
	WC	Unit with Aquasmart control, 1 on/off type 3-way valves, a water temp. sensor and a return air sensor, and electric heater control.
	WD	Unit with Aquasmart control, 1 on/off type 3-way valves with flexible water pipes, a water temp. sensor and a return air sensor, and electric heater control.
	XX	Special control
10		**Coil type**
		Right-hand-side water connections
	A	4-row water coil
	B	2-row water coil
	E	2-row water coil and electric heater: • Size 1.0: 500 W • Size 2.0 and 3.0: 1000 W • Size 2.1 and 3.1: 1000 W • Size 2.2 and 3.2: 2000 W • Size 2.3 and 3.3: 2000 W
	X	Other special coil
		Left-hand-side water connections
	N	4-row water coil
	P	2-row water coil
	Q	2-row water coil and electric heater: • Size 1.0: 500 W • Size 2.0 and 3.0: 1000 W • Size 2.1 and 3.1: 1000 W • Size 2.2 and 3.2: 2000 W • Size 2.3 and 3.3: 2000 W
	Y	Other special coil

Character	Codification	Description
11		**Fresh air supply**
	N	Base unit without fresh air supply
		Right-hand spigot in air flow direction
	J	Base unit with fresh air spigot without controller
	A	Fresh air controller, constant air flow 30 m^3/h (8.3 l/s)
	B	Fresh air controller, constant air flow 60 m^3/h (16.7 l/s), modifiable in 75/100/130 and 160 m^3/h (20.8/27.8/36.1 and 44.4 l/s)
	E	Fresh air controller, constant air flow 160 m^3/h (44.4 l/s)
	F	Fresh air controller, variable air flow
	X	Special controller
		Left-hand spigot in air flow direction
	K	Base unit with fresh air spigot without controller
	C	Fresh air controller, constant air flow 30 m^3/h (8.3 l/s)
	D	Fresh air controller, constant air flow 60 m^3/h (16.7 l/s), modifiable in 75/100/130 and 160 m^3/h (20.8/27.8/36.1 and 44.4 l/s)
	G	Fresh air controller, constant air flow 160 m^3/h (44.4)
	H	Fresh air controller, variable air flow
	Y	Special controller

Character	Codification	Description
12		**No. of return air spigots**
	0	Non-ducted return air (filter provided)
	1 (Size 1)	1 return air spigot 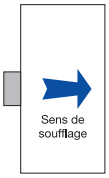
	2 (Size 1, 2 + 3)	2 return air spigots 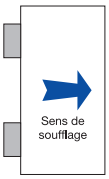
	3 (Sizes 2 + 3)	3 return air spigots 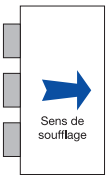
	5 (Sizes 2 + 3)	Plenum with 5 return air spigots (not available when the fresh air option is selected) 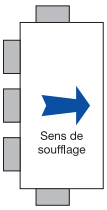
	X	Special plenum

Character	Codification	Description
13		**No. of supply air spigots**
	0	Non-ducted return air
	1 (Size 1)	1 return air spigot 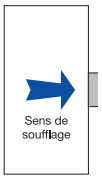
	2 (Sizes 1, 2 + 3)	2 return air spigots 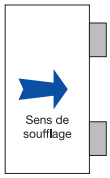
	3 (Sizes 2 + 3)	3 return air spigots 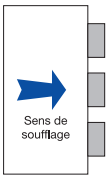
	5 (Sizes 2 + 3)	5 return air spigots 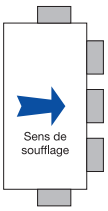
	X	Special plenum

Character	Codification	Description
14		**Fan motor speed wiring**

	Codification	A	B	C	D	E	F	G	H	J	K	L	M	N	P	Q	R	S	T	U	V	Y	Z
Fan set	RED wire	6	6	6	6	6	6	6	6	6	6	5	5	5	5	5	5	4	4	4	3	Size 1	Size 2
	GREY wire	5	5	5	5	4	4	4	3	3	2	4	4	4	3	3	2	3	3	2	2		
	BLACK wire	4	3	2	1	3	2	1	2	1	1	3	2	1	2	1	1	2	1	1	1		
	REP. L wire	L	L	L	L	L	L	L	L	L	L	L	L	L	L	L	L	L	L	L	L		

6-speed wiring

Auto transformer terminal connection arrangements (Q std)

NOTE:
Terminal 1 = highest speed
Terminal 6 = lowest speed

Character	Codification	Description
15	**A**	**Modification index**
16		**Specials**

11 - SPECIFICATION GUIDE

- Supply 42EM Atmosphera fan coil units in accordance with the certified drawings.
- The performance of each 42EM unit shall conform to the published technical and performance data.
- The casings of 42EM units shall be made from 1.2 mm thick galvanised sheet steel, thermally and acoustically insulated, and shall be provided with adequate access for service and maintenance. 42EM units shall be provided with suspension lugs with rubber anti-vibration mounts.
- The supply and return air connection spigots (199 mm diameter, depending on the size) shall be integral with each 42EM unit.
- The fresh air connection spigot, of 125 mm external diameter, shall be integral with each 42EM unit.

  This shall be connected to the primary air duct using flexible ducting available as an optional item.
- 42EM units shall be equipped with either a cooling/heating changeover coil, a monobloc heating and cooling coil or a cooling coil and an electric heater. The water coils shall be provided with manual air purge valves.
- The cooling and heating coils shall be made from copper tubes of 3/8” external diameter and aluminium fins. The maximum water side working pressure shall not exceed 10 bar (1000 kPa).
- The aluminium drain pan beneath the coil and valves shall be monobloc to avoid the possibility of leaks.
- The two-way or three-way on/off water flow control valves shall be provided with flexible water pipes with 1/2” BSP union nuts to simplify connections on site and maintenance and servicing work.
- 42EM units supplied shall be provided with disposable 85% gravimetric (EU3 or G3) and M1 fire class filters.
- Filter access shall be:
  - From below the unit for ducted models,
  - From the rear of the unit for non-ducted models.
- Fans shall be a double-inlet centrifugal forward-curved type, with 1 or 2 fans per unit depending upon unit size.
- The direct-drive fan motor shall be connected to the 3-speed terminals of the controller. It shall be protected against overloads. Motor connections shall conform to Class B for insulation and Class F for varnish.
- 42EM units shall be suitable for connection to electronic controllers (wall-mounted thermostats) which enable the user to change the fan speed manually so as to adjust the unit’s heating and cooling capacity.
- Electrical connections carried out on 42EM units shall be the quick-connection type in order to simplify maintenance. A plastic cover shall protect the terminals.

Numerical control

- The numerical controls shall use the CCN (Carrier Comfort Network) communication protocol.

  These controls shall have the following functions:
  - Control of the Atmosphera fan speed.
  - Control of the water flow through the on/off type two or three-way valves with reference to internal and external loads, in order to maintain a constant ambient temperature in the conditioned space.
  - Provide on/off control of the resistance wire type electric heater.
  - Be controlled by a Zone User Interface.
- The power supply to the controller shall be 230 V a.c. ± 15% single-phase, 50 Hz, to avoid the need for a transformer. The electric heater shall be controlled directly from the Maestro or Aquasmart controller to avoid the need for a power Triac.

Carrier
Order No.: 14225-20, 06.2005. Supersedes order No.: New
Manufacturer reserves the right to change any product specification without notice.
Manufacturer: Carrier s.a., Montluel, France
Printed in Holland.